Wind Power Industry

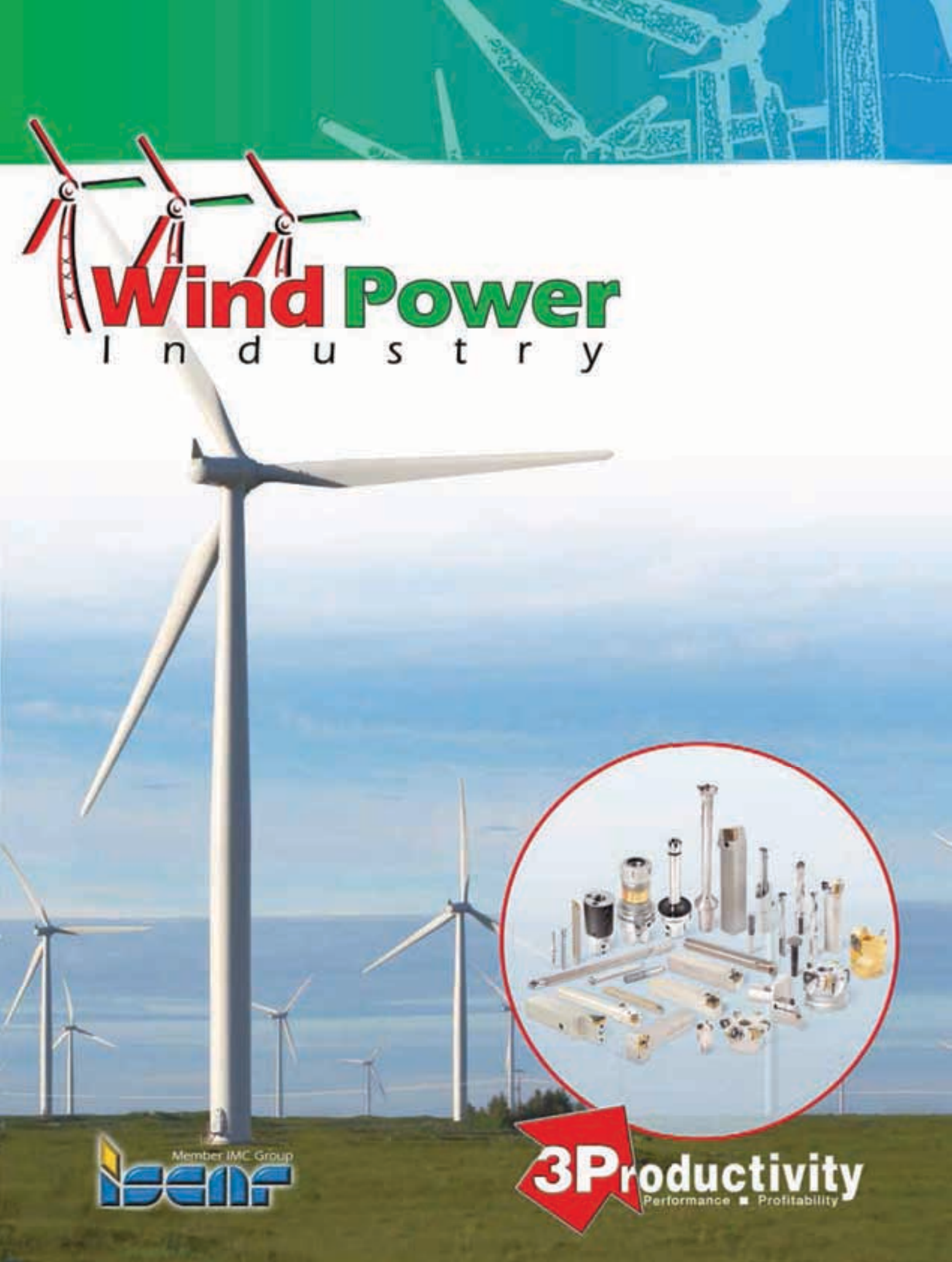

Make th
RIGH
CHOI

he

T

CE!

The Global Network

Make the RIGHT CHOICE

A Global Metalworking Company

In a world of different languages and different mentalities, it is important to have a fully equipped, knowledgeable local supplier to meet your needs.

ISCAR knows this. We have subsidiary offices and agents located in 52 major industrial countries. In some of the larger countries, regional offices have been opened to bring ISCAR personnel and facilities as close as possible to customer production sites.

Many of our subsidiaries have fully equipped training centers. These centers are dedicated to providing a local location where metalworking personnel can be trained in the latest techniques and products for metal removal.

ISCAR has global manufacturing facilities in each of the following countries:

In Europe

- France
- Germany
- Italy
- Spain
- Switzerland
- Turkey
- Hungary
- Slovenia

In the Americas

- Argentina
- Brazil
- United States

In Asia

- South Korea
- China
- Israel

Wind Turbine Components

Major Components

Modern wind turbines employ four major component assemblies - the rotor, nacelle, tower, and balance of system. The rotor includes blades which are used to harness wind energy and convert it into mechanical energy and a hub to support the blades. In addition, most wind turbines have a pitch mechanism to rotate and change the angle of the blades, based on the wind speed and the desired rotating speed.
The nacelle is the structure that contains, encloses and supports the components that convert mechanical energy into elecricity. These components include generators, gearboxes and control electronics.

The tower supports the rotor and nacelle and raises them to a height where higher wind speeds maximize energy extraction. Modern utility-scale wind turbine towers are typically up to ~160 meters (~525′) high, with blades that measure up to ~130 meters (~426′) in diameter and rotor and nacelle assemblies weighing several hundred tons. Additional balance-of-station components at ground height are required to gather, control and transmit power to the grid interconnection. The diagram below provides a schematic view of a wind turbine and its major components.

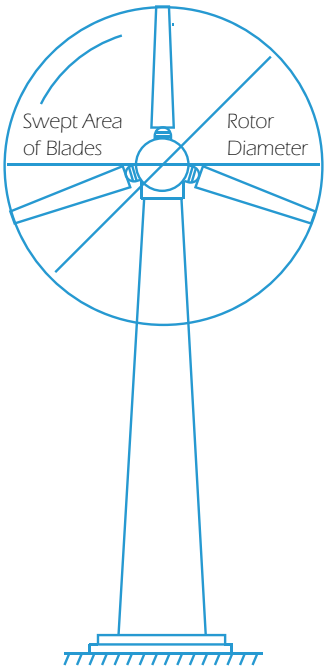

Underground Electrical Connection (Front View)

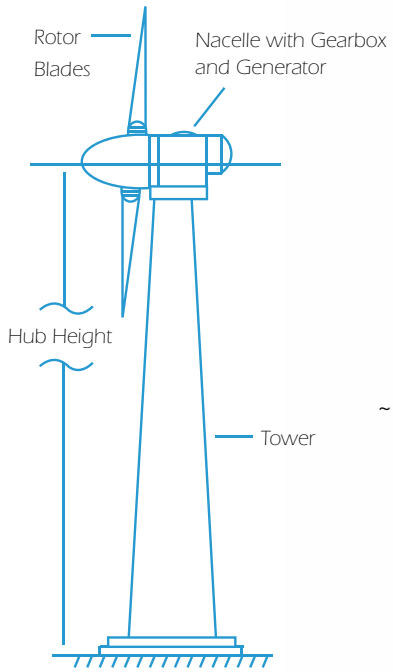

Foundation (Side View)

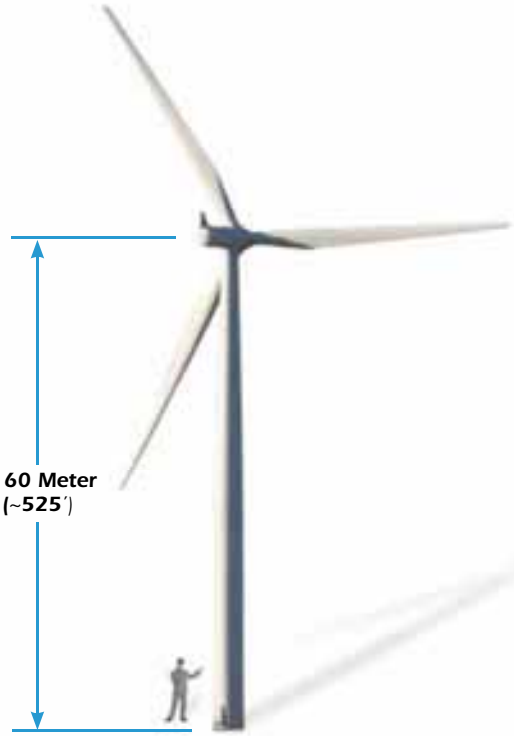

Wind Turbine Major Componets

Wind power, one of the most developing industries of the past two decades, continues to grow and is becoming the largest source of renewable energy.

Wind power has the potential to supply a significant portion of the global demand for sustainable energy, without creating a negative environmental impact.

The increasing importance of wind power energy contributes to the advancement of new windmill technologies and components.

ISCAR is committed to the ongoing development of state-of-the-art cutting tools and machining methods in order to provide its customers with the most productive, profitable and competitive manufacturing solutions for the wind power industry.

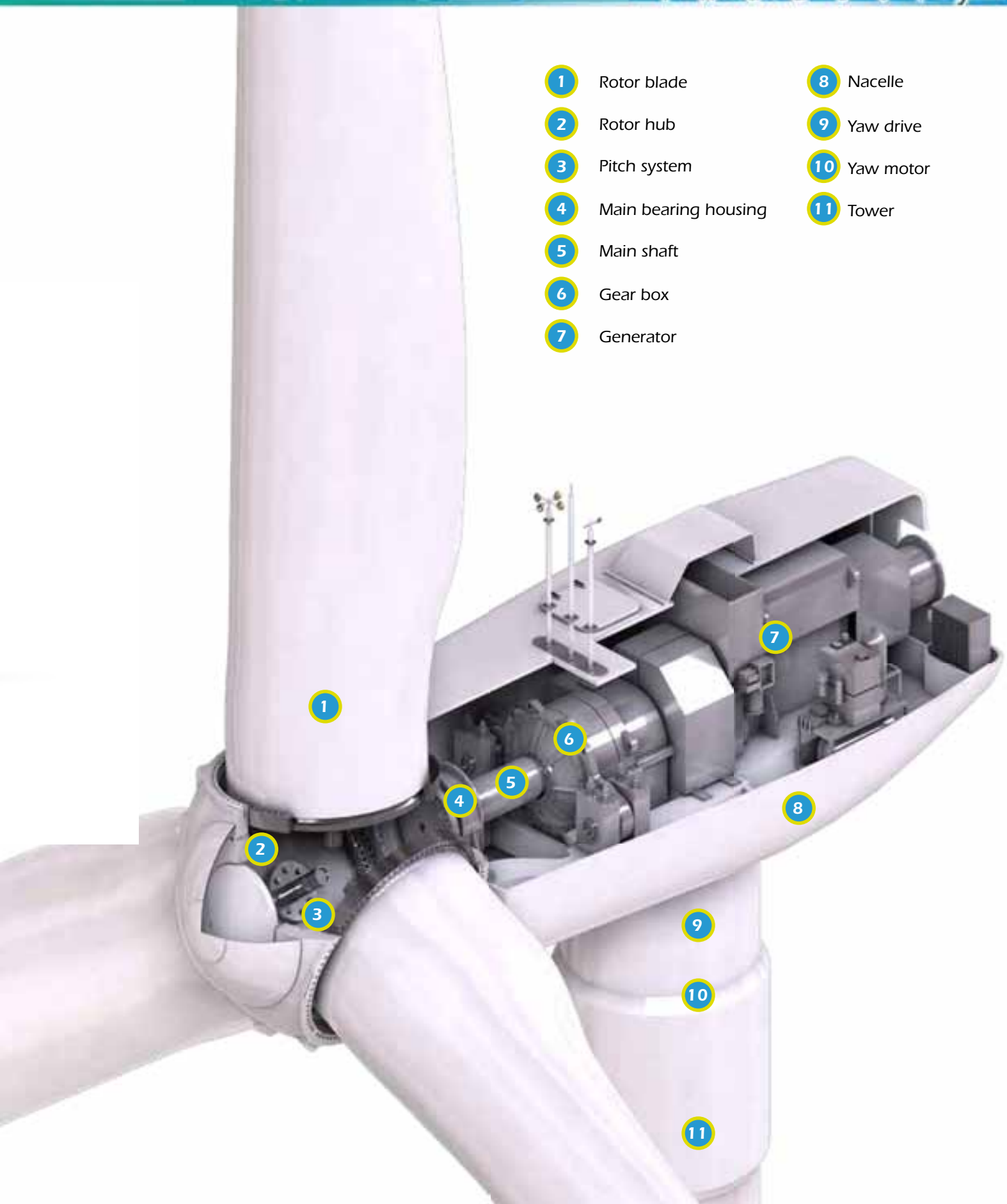

1. Rotor blade
2. Rotor hub
3. Pitch system
4. Main bearing housing
5. Main shaft
6. Gear box
7. Generator
8. Nacelle
9. Yaw drive
10. Yaw motor
11. Tower

Rotor Blade

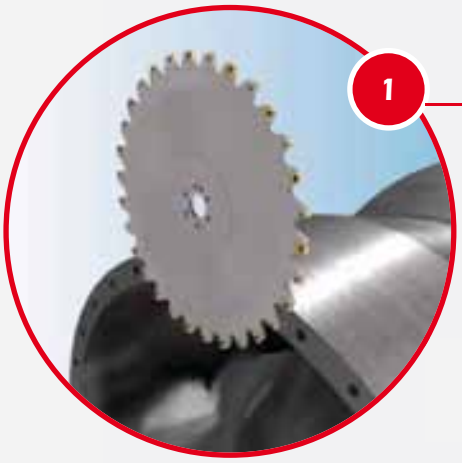

Milling - Slotting (Roughing)
Range: Ø80 - 250 mm (Ø3.15 - 9.84")

TANGSLOT

Slotting cutters with tangentially mounted inserts for precision shallow grooving and slotting applications. Semi-standard PCD tipped inserts on request.

ID8

P M K N S H
✓

Ø80-Ø250 mm

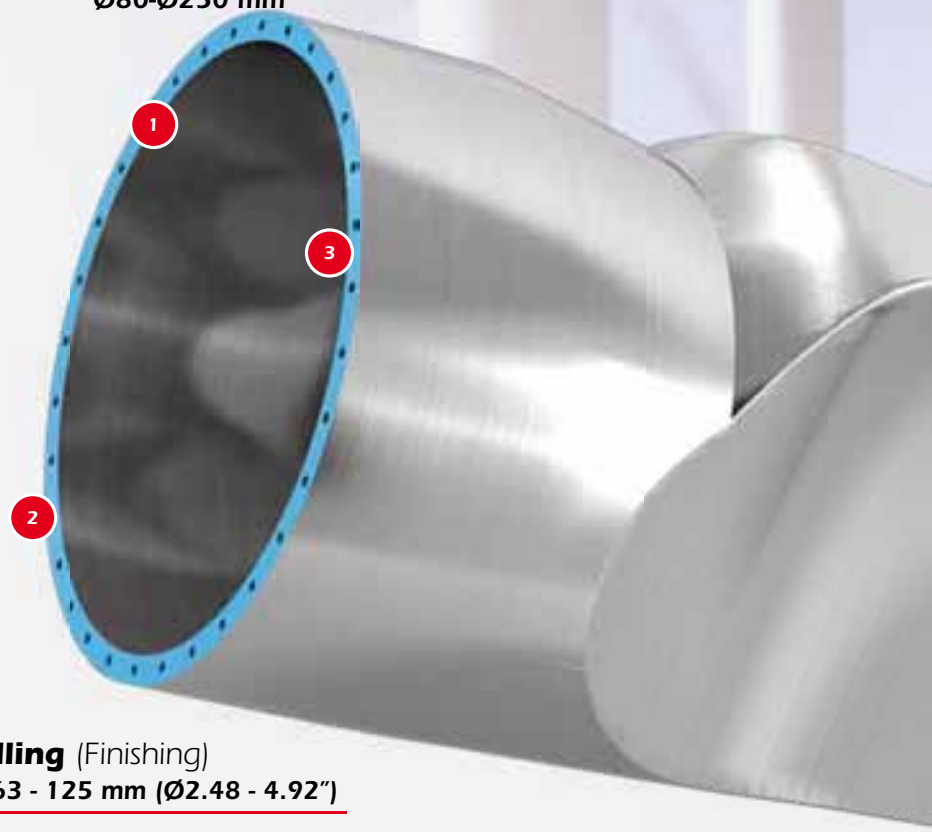

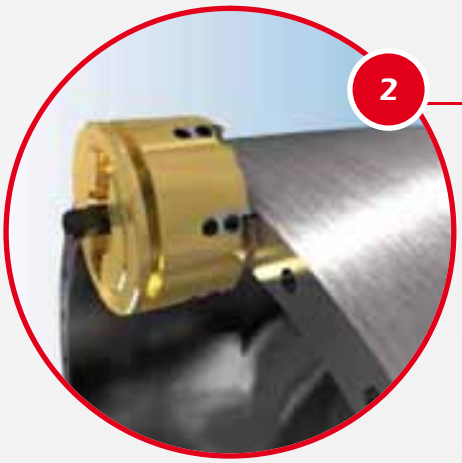

Face Milling (Finishing)
Range: Ø63 - 125 mm (Ø2.48 - 4.92")

ALUFRAISE

High speed dynamic balanceable face mills for machining aluminum casting and carbon fiber materials, with interchangeable PCD brazed cartridges.

ID8

P M K N S H
✓

Ø63-Ø125 mm

Wind Power industry

Modern commercial-sized turbines are typically three-bladed designs. These are manufactured from fiberglass reinforced polyester with epoxy resin binder. New materials such as carbon fiber are being introduced, which provide the high strength-to-weight ratio needed for modern wind turbine blades. The length of a typical turbine blade can reach 60 meters long, installed in 5 MW machines!

Drilling

Range: Ø8 - 25.9 mm (Ø.315 - 1.02")

3

SUMOCHAM
CHAMDRILL LINE

SUMOCHAM comprises a revolutionary clamping system that enables improved productivity output rates, while enabling more insert indexes.

ISCAR PCD LINE

Drilling

Ø8-Ø25.9 mm

Range: Ø12 - 80 mm (Ø.472 - 3.15")

DR-TWIST
INDEXABLE DRILL LINE

These drills are designed with twisted coolant channels, allowing a strong body with excellent resistance to torsion and very efficient chip evacuation. Semi-standard PCD tipped inserts are available on request.

ID8

P M K N S H
✓

Ø12-Ø80 mm

Blade Adapter

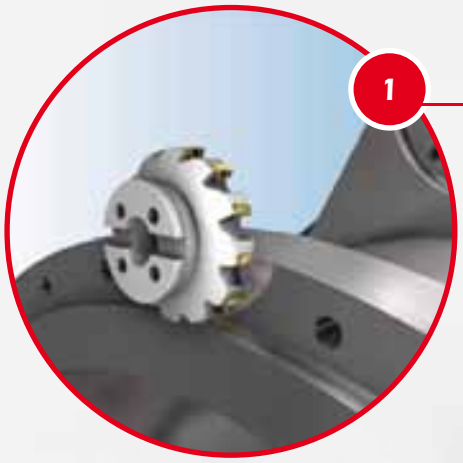

1

Face Milling

Range: Ø16 - 315 mm (Ø.63 - 12.4")

HELIDO
490 LINE

HELIDO is a family of tools for 90° milling. The HELIDO H490 ANKX rectangular inserts have 4 helical right-hand cutting edges.

SUMO TEC 810

P	M	K	N	S	H
✓	✓				✓

Ø16-Ø315 mm

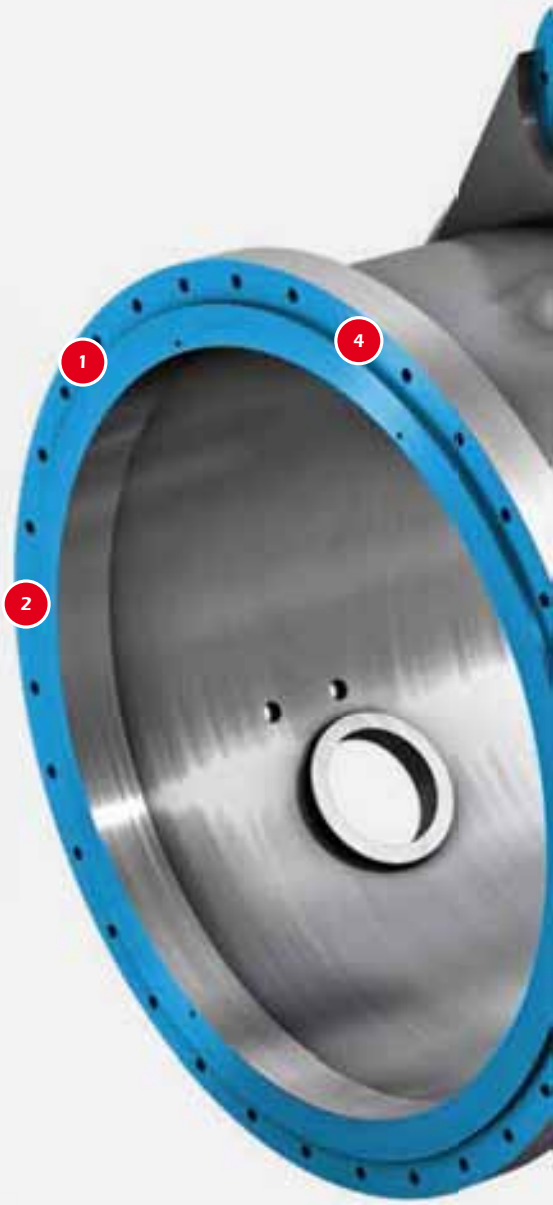

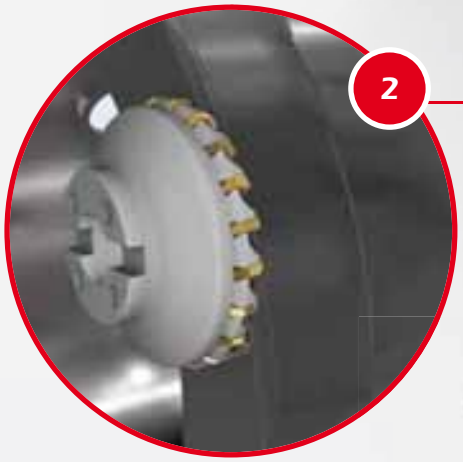

2

Face Milling

Range: Ø63 - 315 mm (Ø2.48 - 12.4")

16MILL

16 economical cutting corners for Fast Metal Removal. Fine pitch 45° face mills are designed for high table speed.

SUMO TEC 810

P	M	K	N	S	H
✓	✓				✓

Ø63-Ø315 mm

The rotation platform of the blade pitch system is made of cast iron. ISCAR has all the right technological solutions for the production of blade adapters.

Drilling

Range: Ø8 - 25.9 mm (Ø.315 - 1.02″)

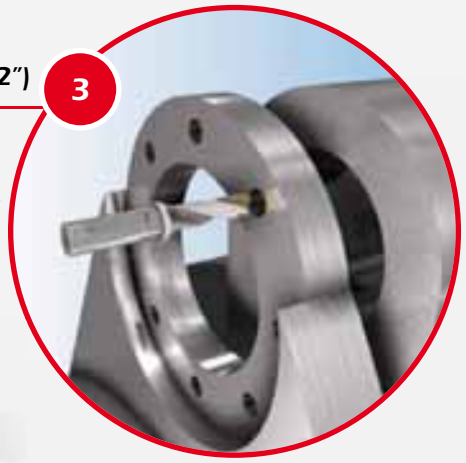

SUMOCHAM
CHAMDRILL LINE

SUMOCHAM comprises a revolutionary clamping system that enables improved productivity output rates, while enabling more insert indexes.

908

P	M	K	N	S	H
✓	✓	✓		✓	✓

Ø8-Ø25.9 mm

Drilling

Range: Ø12 - 80 mm (Ø.472 - 3.15″)

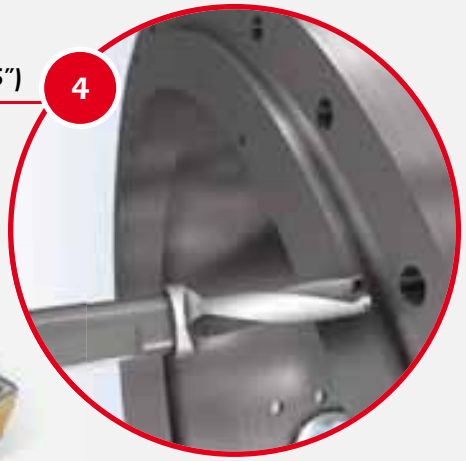

DR-TWIST
INDEXABLE DRILL LINE

These drills are designed with twisted coolant channels, allowing a strong body with excellent resistance to torsion and very efficient chip evacuation.

SUMO TEC 808

P	M	K	N	S	H
✓	✓	✓		✓	✓

Ø12-Ø80 mm

Blade Bearing

Gear Gashing Slotting for Roughing and Finishing Operations

Range: Ø300 - 420 mm (Ø11.81 - 16.53″)

Gear slotting cutters with tangentially mounted inserts are excellent for rough and finishing a variety of teeth profile modules.

908

P	M	K	N	S	H
✓	✓	✓		✓	✓

Ø300-Ø420 mm

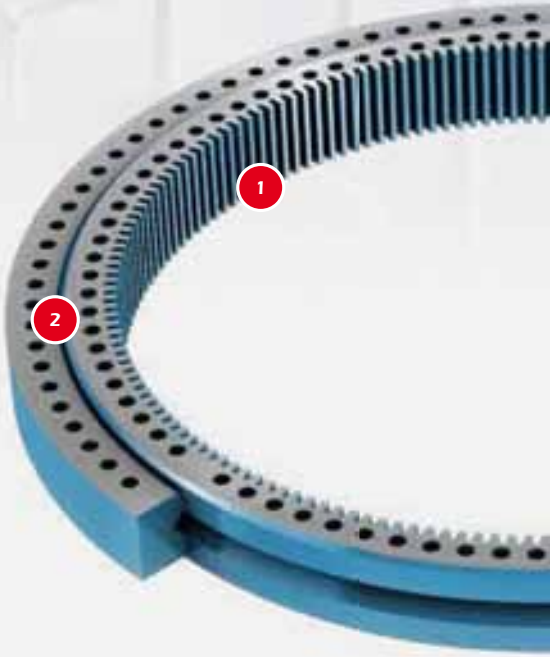

Drilling

Range: Ø12 - 80 mm (Ø.472 - 3.15″)

DR-TWIST
INDEXABLE DRILL LINE

These drills are designed with twisted coolant channels, allowing a strong body with excellent resistance to torsion and very efficient chip evacuation.

SUMO TEC 808

P	M	K	N	S	H
✓	✓	✓		✓	✓

Ø12-Ø80 mm

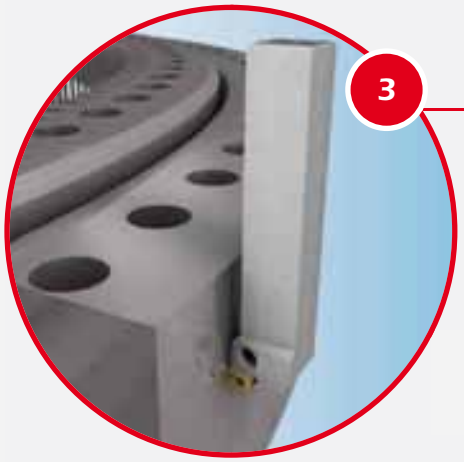

External Rough Turning

SUMOTURN
HEAVY DUTY LINE

A line of external and internal tools, as well as large-sized inserts for heavy duty applications.

SUMO TEC 8150

P	M	K	N	S	H
✓		✓			

SUMO TEC 8250

P	M	K	N	S	H
✓	✓				

Wind Power industry

Adjusts the angle of the blades by rotating a bearing at the root of each blade. The blade bearing enables to control power and slow the rotor. Made of bearing steel.

Inner Boring of Bearing Roll

4

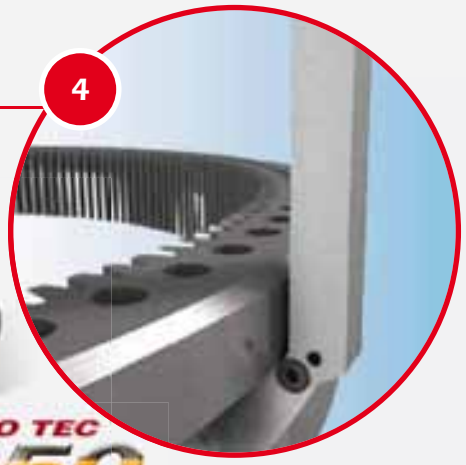

SUMOTURN
HEAVY DUTY LINE

A line of external and internal tools, as well as large-sized inserts for the heavy duty applications.

SUMO TEC 8150						SUMO TEC 8250					
P	M	K	N	S	H	P	M	K	N	S	H
	✓	✓					✓	✓			

Ceramics - Hard Turning Finishing Operation

5

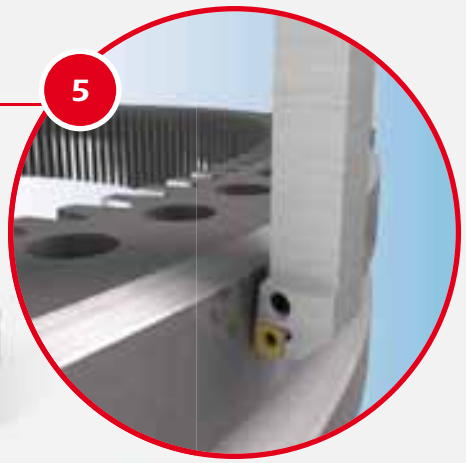

ISOTURN

IN23 - 40 - 50 HRc
IN22 - over 50 HRc
IN420 - over 50 HRc

IN22						IN23						IN420					
P	M	K	N	S	H	P	M	K	N	S	H	P	M	K	N	S	H
		✓			✓			✓			✓			✓			✓

CBN - Hard Turning Finishing Operation

6

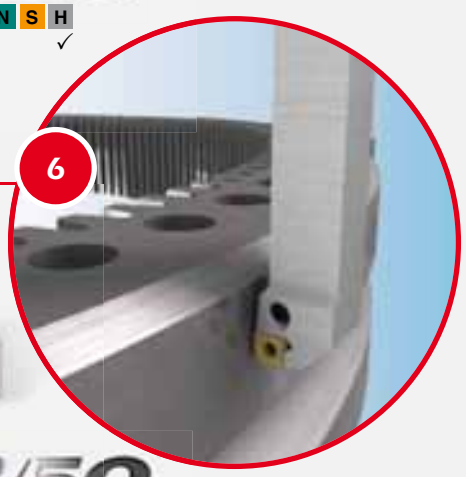

ISOTURN

IB50 - 45 - 65 HRc
(interrupted cutting)
IB10H - 58 - 65 HRc
IB10HC - 58 - 65 HRc
(continuous cutting)

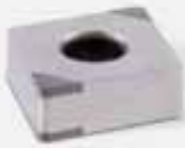

IB10HC						IB10H						IB50					
P	M	K	N	S	H	P	M	K	N	S	H	P	M	K	N	S	H
					✓						✓			✓			✓

Rotor Hub

1

Shouldering

Range: Ø16 - 125 mm (Ø.63 - 4.92″)

HELITANG
T490 LINE

4 cutting corners, tangential geometry for Fast Metal Removal at very high material removal rates.

SUMO TEC 810

P	M	K	N	S	H
✓	✓				✓

Ø16-Ø125 mm

2

Chamfering

Range: Ø8 - 25 mm (Ø.315 - .984″)

MULTI-MASTER
INDEXABLE SOLID CARBIDE LINE

A family of tools with shanks that have unique interchangeable heads for a variety of milling applications including ball nose, straight shoulder, slitting and slotting applications.

908

P	M	K	N	S	H
✓	✓	✓		✓	✓

Ø8-Ø25 mm

3

Rough Pocketing

Range: Ø16 - 125 mm (Ø.63 - 4.92″)

HELIDO
600 UPFEED LINE

Trigon double-sided insert with 6 edges combines HELIDO's strength and FEEDMILL's special geometry to facilitate milling at very high feeds.

SUMO TEC 810

P	M	K	N	S	H
✓	✓				✓

Ø16-Ø125 mm

Wind Power industry

The hub is made of a cast iron case. It generally connects the three blade rotational assembly to a linear low speed shaft, which connects to the turbine's gearbox. Most modern turbine hubs contain a pitch system to adjust the angle of the blades by rotation of a bearing at the root of each blade, to control power and slow the rotor as required.

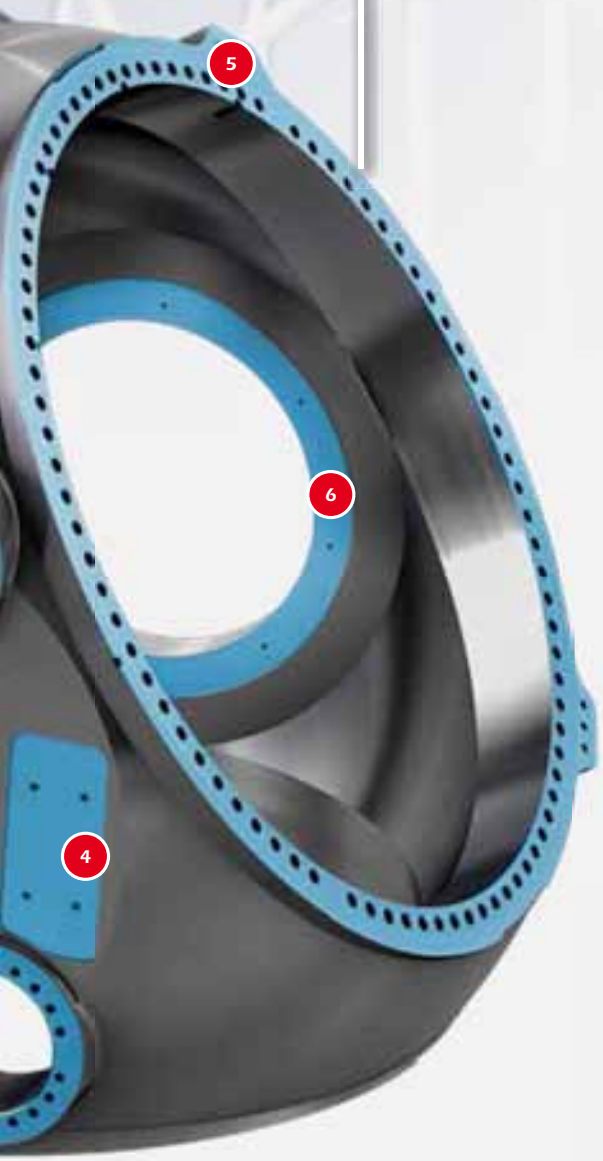

Mill Threading

Range: Ø4 - 20 mm (Ø.157 - .787")

4

SOLIDTHREAD

Solid carbide thread mills for the production of small internal threads. The thread mills feature a short 3-tooth cutting zone with 3 flutes and a released neck between the cutting zone and the shank.

908

P	M	K	N	S	H
✓	✓	✓		✓	✓

Ø4-Ø20 mm

Drilling

Range: Ø8 - 25.9 mm (Ø.315 - 1.02")

5

SUMOCHAM
CHAMDRILL LINE

SUMOCHAM comprises a revolutionary clamping system that enables improved productivity output rates, while enabling more insert indexes.

908

P	M	K	N	S	H
✓	✓	✓		✓	✓

Ø8-Ø25.9 mm

Back Milling

Range: Ø100 - 250 mm (Ø3.94 - 9.84")

TANGSLOT

(FST slotting cutters) ISCAR's tangential slot milling cutters use cutting inserts with 4 cutting edges. They are suitable for high table feeds, resulting in increased productivity.

SUMO TEC 810

P	M	K	N	S	H
✓	✓			✓	

4100

P	M	K	N	S	H
✓	✓			✓	

Rotor Hub

7

Face Milling

Range: Ø40 - 200 mm (Ø1.57 - 7.87″)

HELIDO
845 LINE

S845 SNMU 1305... - square double-sided inserts with 8 cutting edges, or ONMU 0505... octagonal, double-sided inserts with 16 cutting edges. Enable highly efficient milling.

SUMO TEC 810

P	M	K	N	S	H
✓	✓				✓

Ø40-Ø200 mm

8

Helical Interpolation Rough Boring

Range: Ø20 - 80 mm (Ø.787 - 3.15″)

HELITANG
T490 LINE

4 cutting corners, tangential geometry for Fast Metal Removal.

SUMO TEC 810

P	M	K	N	S	H
✓	✓				✓

Ø20-Ø80 mm

9

Drilling

Range: Ø12 - 80 mm (Ø.472″-3.15″)

DR-TWIST
INDEXABLE DRILL LINE

These drills are designed with twisted coolant channels, which allow for a strong drill body with excellent resistance to torsion and very efficient chip evacuation.

SUMO TEC 808

P	M	K	N	S	H
✓	✓	✓		✓	✓

Ø12-Ø80 mm

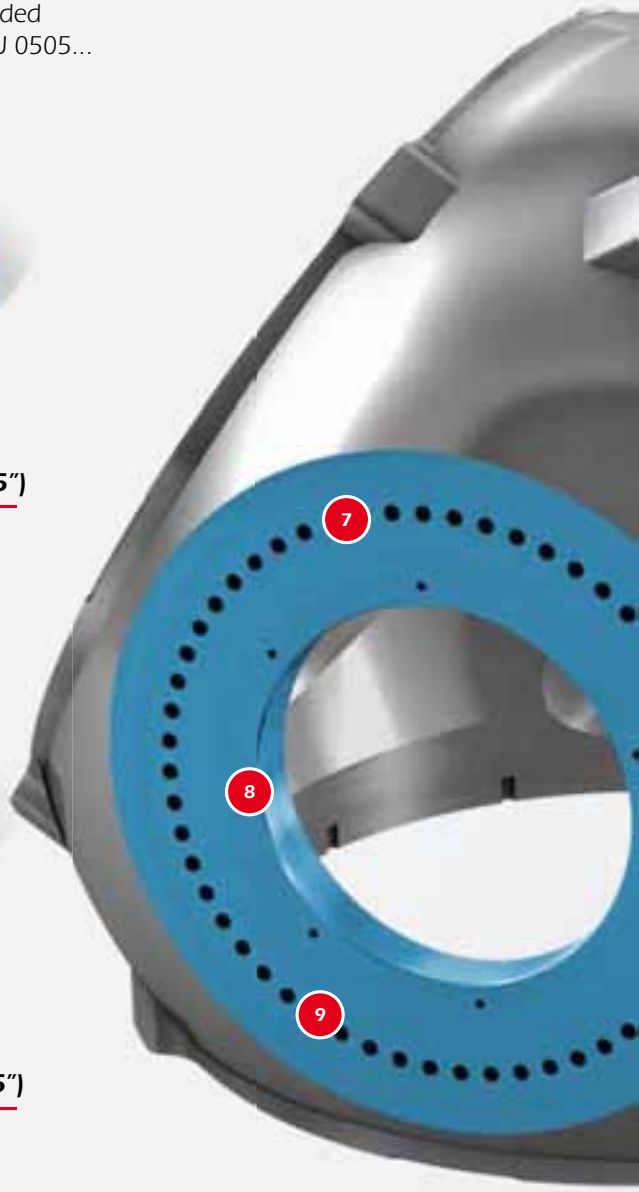

The hub is made of a cast iron case. It generally connects the three blade rotational assembly to a linear low speed shaft, which connects to the turbine's gearbox. Most modern turbine hubs contain a pitch system to adjust the angle of the blades by rotation of a bearing at the root of each blade, to control power and slow the rotor as required.

Milling

Range: Ø12 - 40 mm (Ø.472 - 1.57″)

10

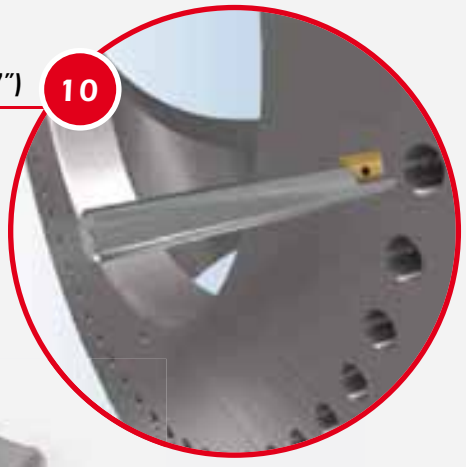

MILLTHREAD

Enables internal thread milling and external qualitative precision threads on CNC machines by using a helical interpolation CNC program. MILLTHREAD thread milling cutters are available in addition to solid carbide thread milling cutters with indexable thread milling inserts for any standard thread profile.

928

P	M	K	N	S	H
✓	✓	✓		✓	

Ø12-Ø40 mm

Fine Boring

Range: Up to Ø2.1 meter (Ø82.67″)

11

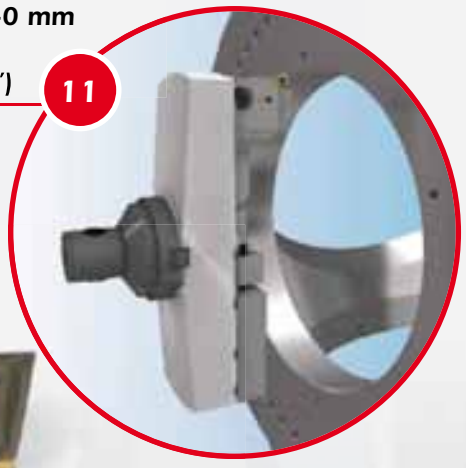

ITSBORE

The ITSBORE system TCH A.L: Aluminum twin cutter heads for rough and fine boring operations.

SUMO TEC 5005

P	M	K	N	S	H
			✓		

Up to Ø2.1 meter

Axle Pin (Gearless)

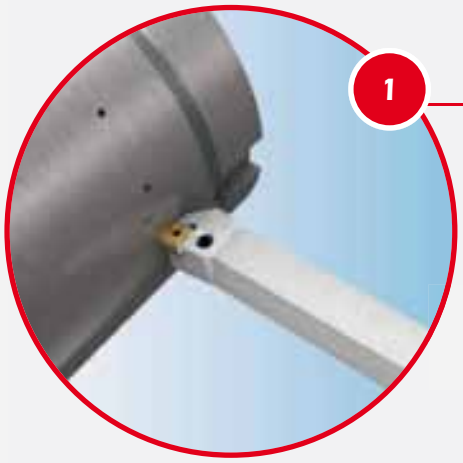

1

Rough External Turning

SUMOTURN
HEAVY DUTY LINE

A line of external and internal tools, as well as large-sized inserts for heavy duty applications.

SUMO TEC 8150

P	M	K	N	S	H
✓		✓			

SUMO TEC 8250

P	M	K	N	S	H
✓	✓				

2

Rough External Turning

HELITURN TG

Tangentially clamped insert with unique helical shaped cutting edges, provides an exceptional solution, enabling very large depths of cut at high feeds.

SUMO TEC 808

P	M	K	N	S	H
✓	✓	✓		✓	✓

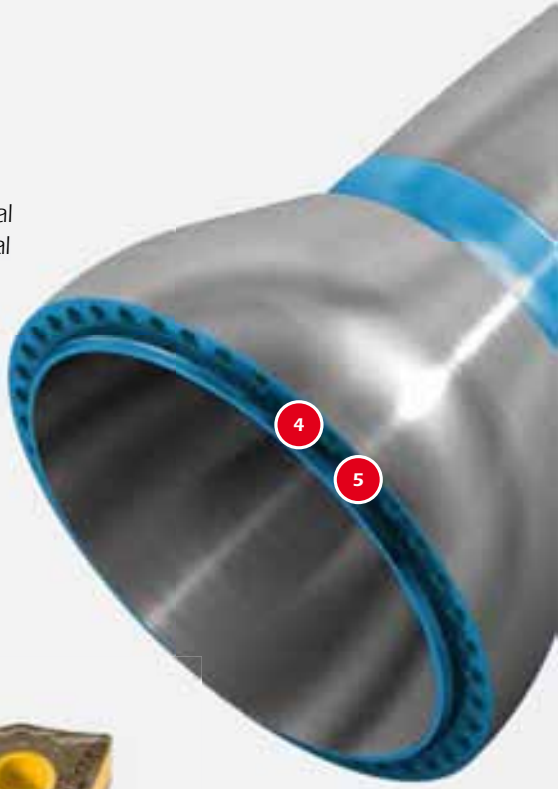

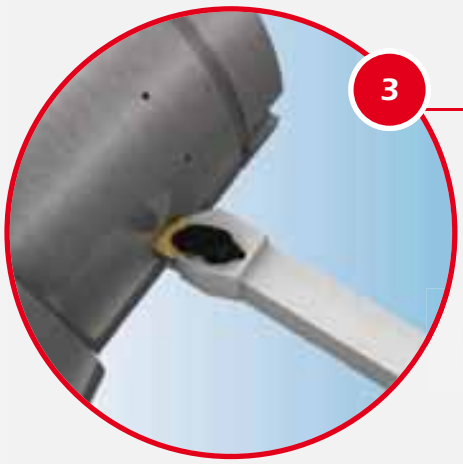

3

External Turning (Finishing)

ISOTURN

A line of external and internal tools, as well as large-sized inserts for the heavy duty applications.

SUMO TEC 8150

P	M	K	N	S	H
✓		✓			

SUMO TEC 8250

P	M	K	N	S	H
✓	✓				

A conical cast steel axle connects the rotor hub and the annular generator directly, as a fixed unit without gears. Made of alloy steel.

Drilling

Range: Ø8 - 25.9 mm (Ø.315 - 1.02")

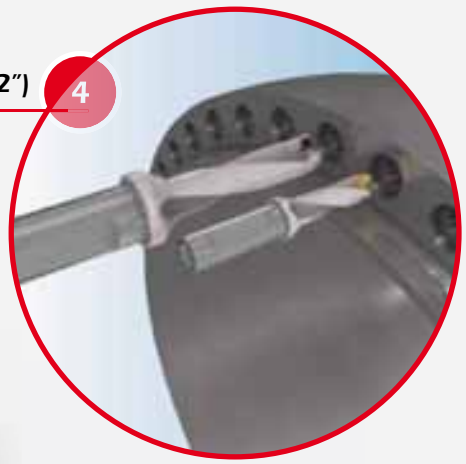

SUMOCHAM
CHAMDRILL LINE

SUMOCHAM comprises a revolutionary clamping system that enables improved productivity output rates, while enabling more insert indexes.

908

P	M	K	N	S	H
✓	✓	✓		✓	✓

Ø8-Ø25.9 mm

Drilling

Range: Ø12 - 80 mm (Ø.472 - 3.15")

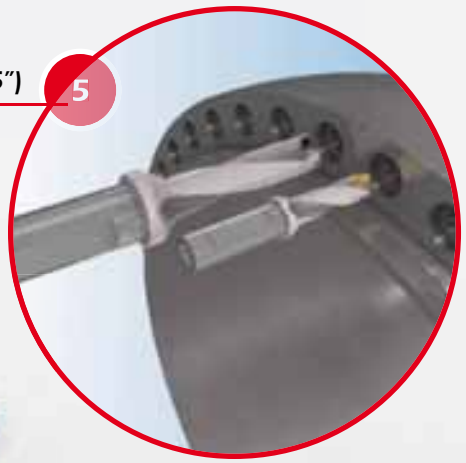

DR-TWIST
INDEXABLE DRILL LINE

Drills are designed with twisted coolant channels, allowing a strong body with excellent resistance to torsion and very efficient chip evacuation.

SUMO TEC 808

P	M	K	N	S	H
✓	✓	✓		✓	✓

Ø12-Ø80 mm

Main Shaft

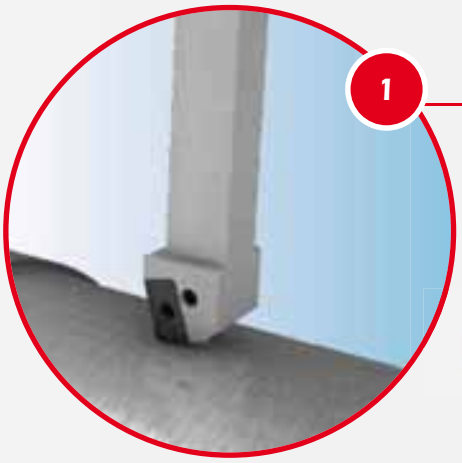

1

External Rough Turning

SUMOTURN
HEAVY DUTY LINE

A line of external and internal tools for heavy duty applications with large-sized inserts.

SUMO TEC 8150

P	M	K	N	S	H
	✓	✓			

SUMO TEC 8250

P	M	K	N	S	H
✓	✓				

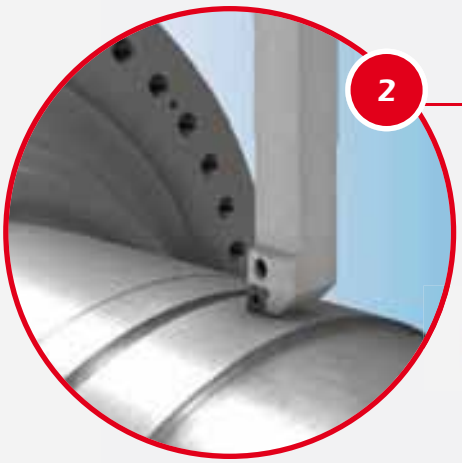

2

O.D. Rough Turn

SUMOTURN
HEAVY DUTY LINE

A line of external and internal tools for heavy duty applications with large-sized inserts.

SUMO TEC 8150

P	M	K	N	S	H
	✓	✓			

SUMO TEC 8250

P	M	K	N	S	H
✓	✓				

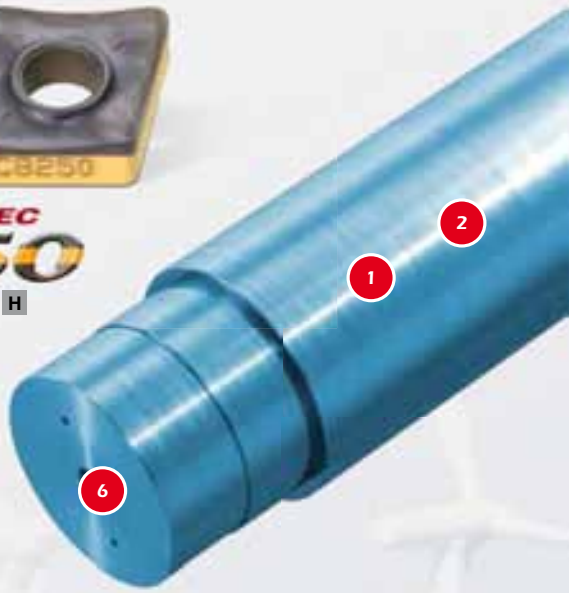

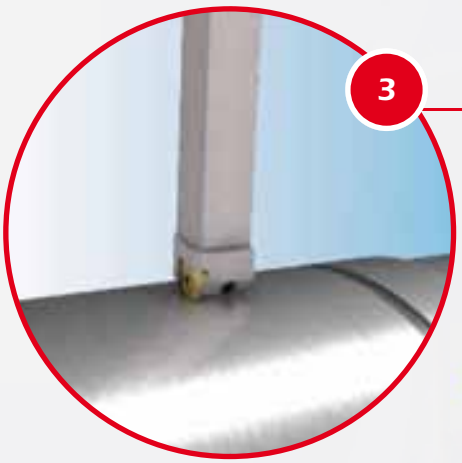

3

External Turning (Finishing)

HELITURN TG

Tangentially clamped insert with unique helical shaped cutting edges. Provides an exceptional solution for turning, enabling very large depths of cut and high feeds.

SUMO TEC 8250

P	M	K	N	S	H
✓	✓				

Wind Power industry

The main shaft of the wind turbine is usually forged from hardened and tempered steel. The main shaft transmits a low speed rotational force from the rotor hub. Kinetic wind energy to the gearbox enables high speed rotation, which spins the generator and thus creates electrical energy.

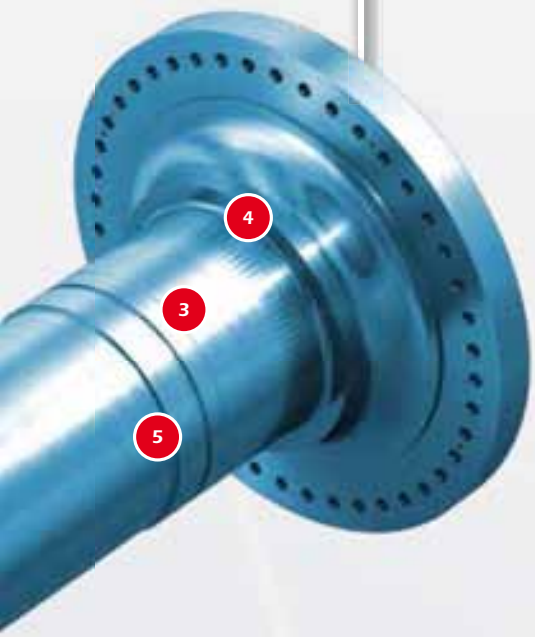

External Turning (Finishing)

ISOTURN

A line of external and internal tools, as well as large-sized inserts for heavy duty applications.

SUMO TEC 8150

P	M	K	N	S	H
✓		✓			

SUMO TEC 8250

P	M	K	N	S	H
✓	✓				

External Grooving

GROOVETURN

Turning with groove-turn tools give a surface quality far superior to anything normally possible when turning with standard ISO tools.In fact, turning with GRIP tools can produce a surface quality comparable to grinding.

SUMO TEC 8250

P	M	K	N	S	H
✓	✓				

Deep Drilling

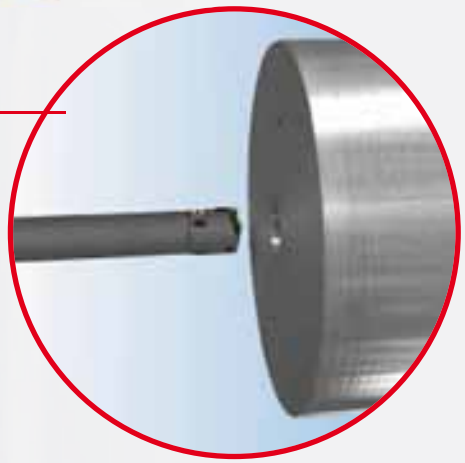

ISCARDEEPDRILL

BTA System
DTS – Double Tube System
Range: Ø18.41 - 168.99 mm
(Ø.724 - 6.65"), IT9-IT10
STS – Single Tube System
Range: Ø14.51 - 245.99 mm
(Ø.571 - 9.68"), IT9

9025

P	M	K	N	S	H
✓	✓	✓			

Main Shaft

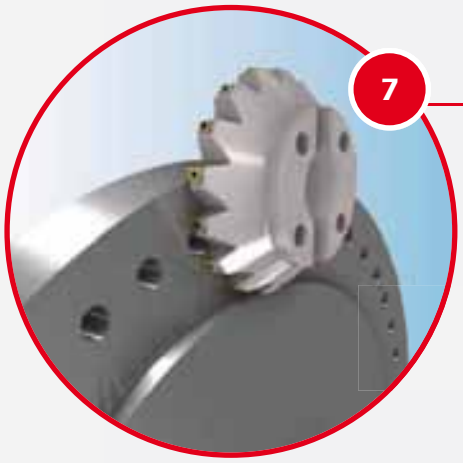

Face Milling (Finishing)
Range: Ø16 - 125 mm (Ø.63 - 4.92")

HELITANG
T490 LINE

4 cutting corners, tangential geometry for Fast Metal Removal at very high material removal rates.

SUMO TEC 810

P	M	K	N	S	H
✓	✓				✓

Ø16-Ø125 mm

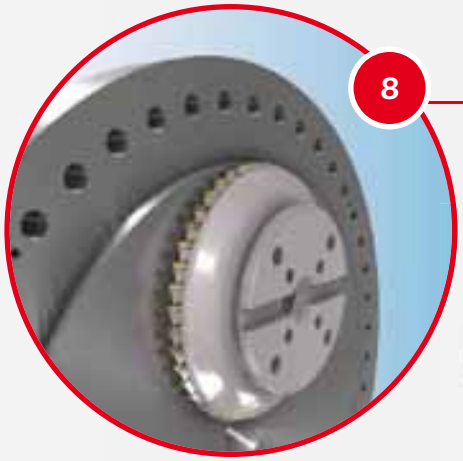

Face Milling (Finishing)
Range: Ø63 - 315 mm (Ø2.48 - 12.4")

16MILL

16 economical cutting corners for Fast Metal Removal. Fine pitch 45° face mills are designed for high table speed.

SUMO TEC 808

P	M	K	N	S	H
✓	✓	✓		✓	✓

Ø63-Ø315 mm

Drilling
Range: Ø12 - 80 mm (Ø.472 - 3.15")

DR-TWIST
INDEXABLE DRILL LINE

These drills are designed with twisted coolant channels, allowing a strong body with excellent resistance to torsion and very efficient chip evacuation.

SUMO TEC 808

P	M	K	N	S	H
✓	✓	✓		✓	✓

Ø12-Ø80 mm

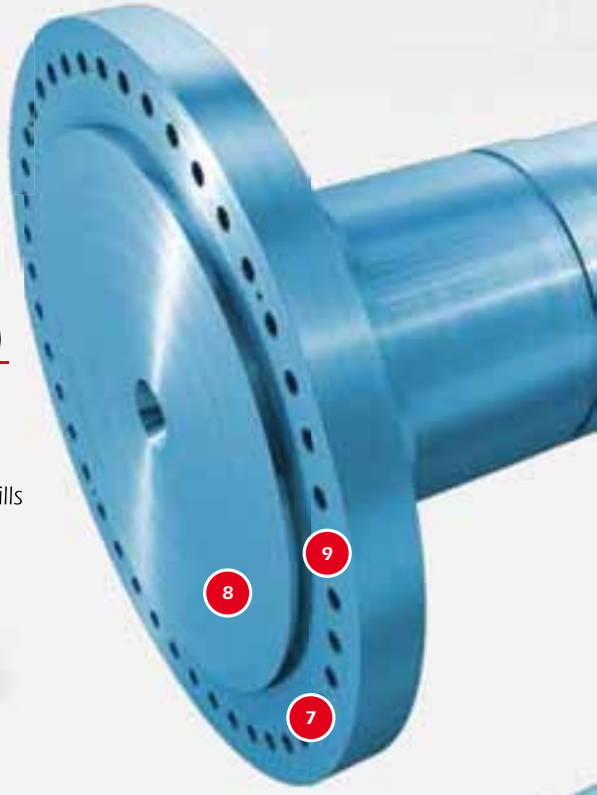

Wind Power industry

The main shaft of the wind turbine is usually forged from hardened and tempered steel. The main shaft transmits a low speed rotational force from the rotor hub. Kinetic wind energy to the gearbox enables high speed rotation, which spins the generator and thus creates electrical energy.

Face Milling

Range: Ø40 - 200 mm (Ø1.57 - 7.87″)

10

HELIDO
845 LINE

S845 SNMU 1305... - square, double-sided inserts with 8 cutting edges or the ONMU 0505... octagonal, double-sided inserts with 16 cutting edges.

SUMO TEC 810

P	M	K	N	S	H
✓	✓			✓	

Ø40-Ø200 mm

Drilling

Range: Ø8 - 25.9 mm (Ø.315 - 1.02″)

11

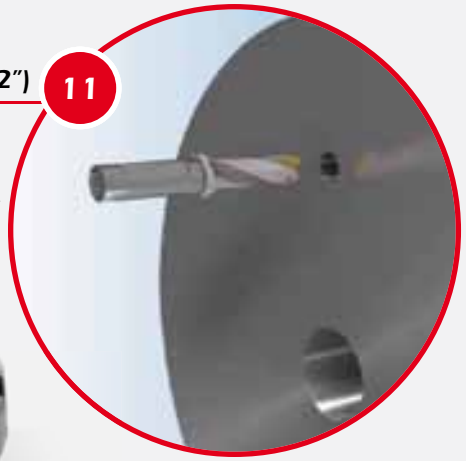

SUMOCHAM
CHAMDRILL LINE

SUMOCHAM comprises a revolutionary clamping system that enables improved productivity output rates, while enabling more insert indexes.

908

P	M	K	N	S	H
✓	✓	✓		✓	✓

Ø8-Ø25.9 mm

Threading

Range: Ø4 - 20 mm (Ø.157 - .787″)

12

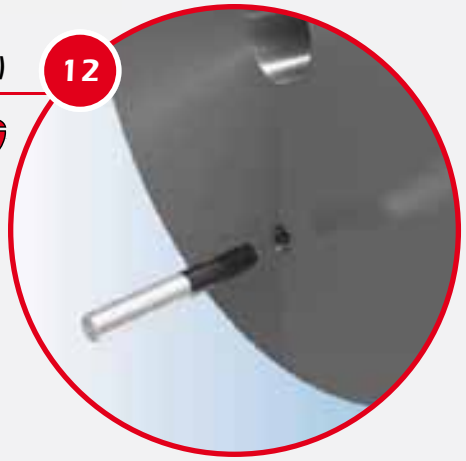

SOLIDTHREAD

Solid carbide thread mills for the production of small internal threads. The thread mills feature a short 3-tooth cutting zone with 3 flutes and a released neck between the cutting zone and the shank.

908

P	M	K	N	S	H
✓	✓	✓		✓	✓

Ø4-Ø20 mm

Main Bearing Housing

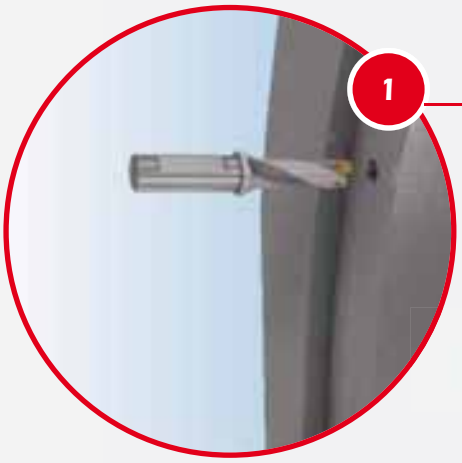

1

Drilling

Range: Ø8 - 25.9 mm (Ø.315 - 1.02″)

SUMOCHAM
CHAMDRILL LINE

SUMOCHAM comprises a revolutionary clamping system that enables improved productivity output rates, while enabling more insert indexes.

908

P	M	K	N	S	H
✓	✓	✓		✓	✓

Ø8-Ø25.9 mm

2

Threading

Range: Ø4 - 20 mm (Ø.157 - .787″)

SOLIDTHREAD

Solid carbide thread mills for the production of small internal threads. The thread mills feature a short 3-tooth cutting zone with 3 flutes and a released neck between the cutting zone and the shank.

908

P	M	K	N	S	H
✓	✓	✓		✓	✓

Ø4-Ø20 mm

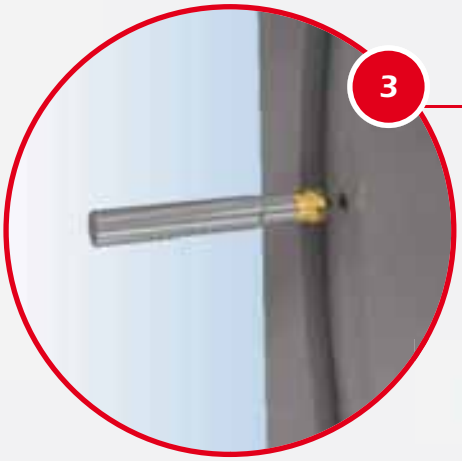

3

Chamfering

Range: Ø6 - 25 mm (Ø.236 - .984″)

MULTI-MASTER
INDEXABLE SOLID CARBIDE LINE

A family of tools with shanks and unique interchangeable heads for a variety of milling applications including ball nose, straight shoulder and slitting and slotting applications.

908

P	M	K	N	S	H
✓	✓	✓		✓	✓

Ø6-Ø25 mm

The main bearing housing absorbs the residual bending loads, while the rotor shaft transmits the rotational torque to the gearbox.

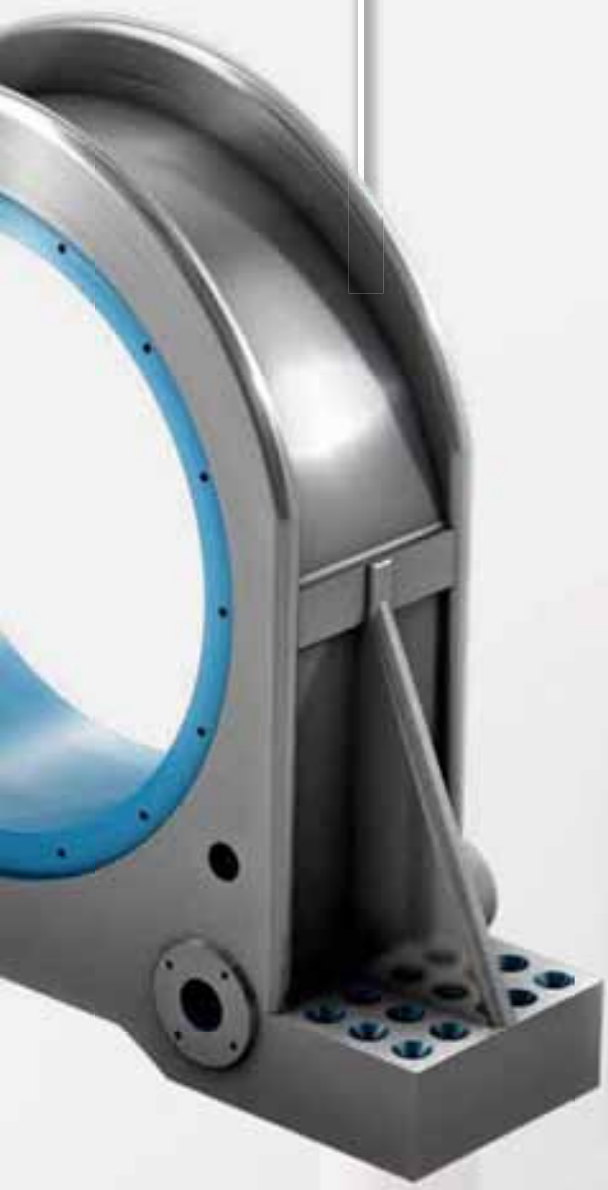

Face Miling

Range: Ø16 - 315 mm (Ø.63 - 12.4")

HELIDO
490 LINE

HELIDO is a family of tools for 90° milling. The HELIDO H490 ANKX rectangular inserts have 4 helical right-hand cutting edges.

SUMO TEC 810

P	M	K	N	S	H
✓	✓				✓

Ø16-Ø315 mm

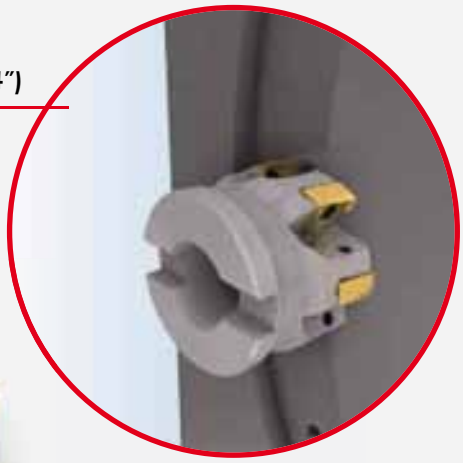

Deep Drilling

Range: Ø25 - 65 mm (Ø.984 - 2.56")

DR-DH

Deep drills for milling centers and lathe machines with a drilling ratio of up to x7Dl.

SUMO TEC 808

P	M	K	N	S	H
✓	✓	✓		✓	✓

Ø25-Ø65 mm

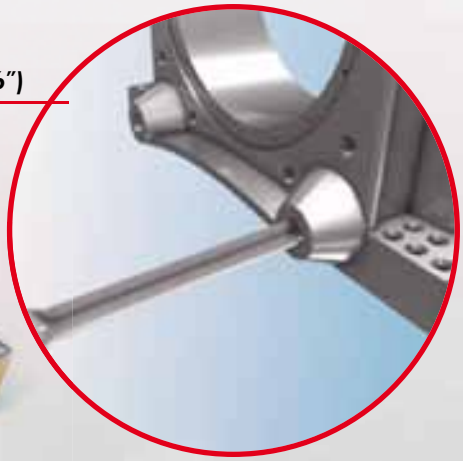

Main Bearing Housing

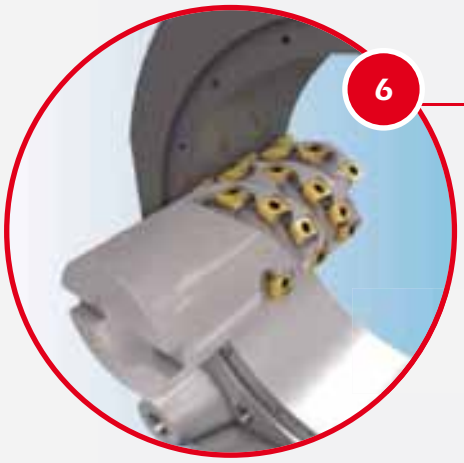

Roughing by Helical Interpolation

Range: Ø20 - 80 mm (Ø.787 - 3.15")

HELITANG

T490 LINE

4 cutting corners, tangential geometry for Fast Metal Removal at very high material removal rates.

SUMO TEC 810

P	M	K	N	S	H
✓	✓				✓

Ø20-Ø80 mm

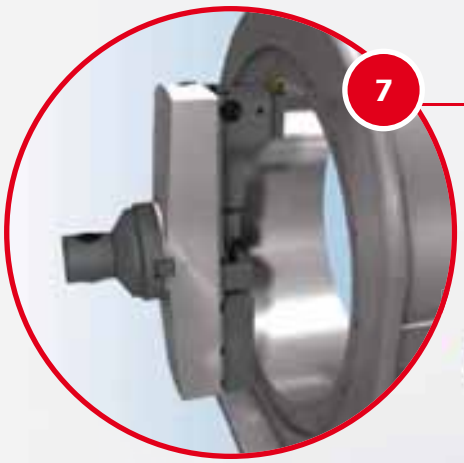

Fine Boring

Range: Up to Ø1.1 meter (Ø43.3")

ITSBORE

TCH A.L 600 Aluminum twin cutter heads for rough and fine boring operations.

SUMO TEC 5005

P	M	K	N	S	H
		✓			

Up to Ø1.1 meter

The main bearing housing absorbs the residual bending loads, while the rotor shaft transmits the rotational torque to the gearbox.

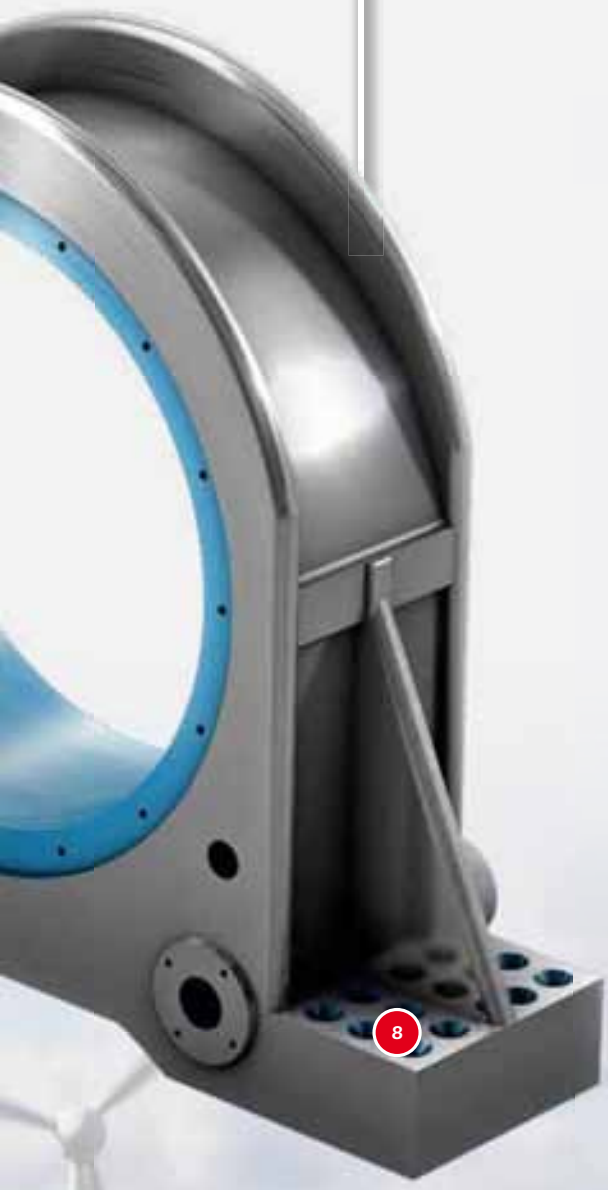

Drilling

Range: Ø12 - 80 mm (Ø.472 - 3.15″)

8

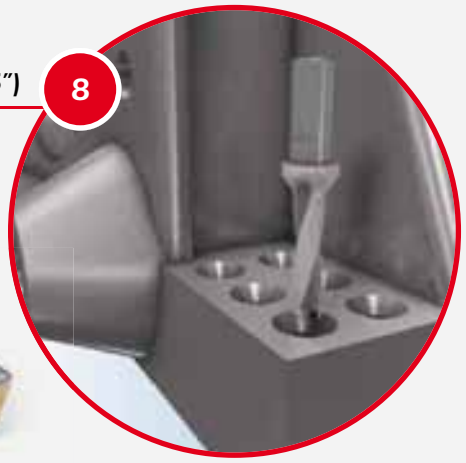

DR-TWIST

INDEXABLE DRILL LINE

Drills designed with twisted coolant channels, which allow for a strong body, have excellent resistance to torsion and very efficient chip evacuation.

SUMO TEC 808

P	M	K	N	S	H
✓	✓	✓		✓	✓

Ø12-Ø50 mm

Gear Sub-Component

1

Hob Indexable Milling Cutter

Range: Ø180 - 450 mm (Ø7.08 - 17.72″)

For high productivity roughing and finishing of gears.

908

P	M	K	N	S	H
✓	✓	✓		✓	✓

Ø180-Ø450 mm

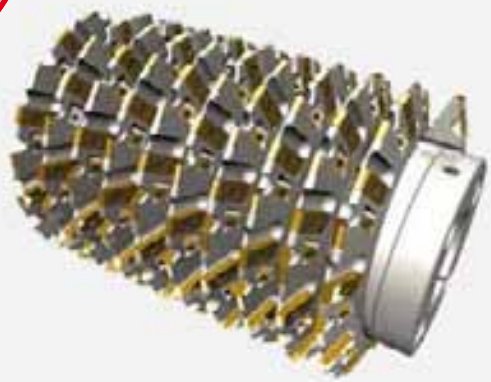

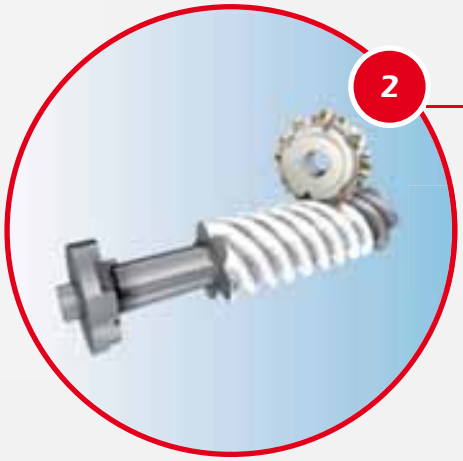

2

Special Form Cutter

Range: Ø210 - 500 mm (Ø8.26 - 19.68″)

For machining male or female type axle screws.

908

P	M	K	N	S	H
✓	✓	✓		✓	✓

Ø210-Ø500 mm

Wind Power industry

The majority of turbine designs feature a gearbox, although some manufacturers produce 'direct drive designs', which do not require one. The gearbox employs a planetary gear system to convert the low-speed high-torque rotation of the rotor into high-speed rotation at low torque for input to the generator. The gearbox drives a high speed shaft leading to the generator, typically at 1,500 revolutions per minute.

CBN - Hard Turning Finishing Operation

3

ISOTURN

IB55 - 45 - 65 HRc
IB50 - 45 - 65 HRc
(interrupted cutting)

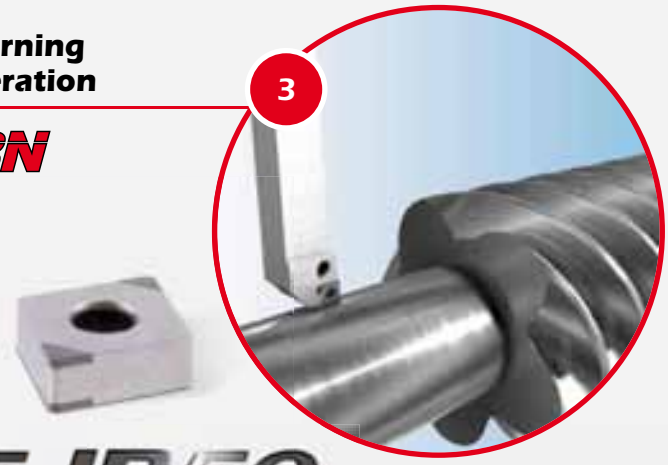

	P	M	K	N	S	H
IB55			✓		✓	
IB50			✓		✓	

Planetary Carrier

Face Milling

Range: Ø63 - 315 mm (Ø2.48 - 12.4")

16MILL

16 economical cutting corners for Fast Metal Removal. Fine pitch 45° face mills are designed for high table speed.

SUMO TEC 810

P	M	K	N	S	H
✓	✓				✓

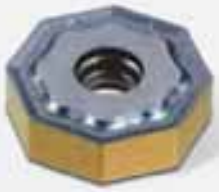

Ø63-Ø315 mm

The rotary gear planetary carrier, made of nodular cast iron, is a part of the gear assembly. It functions to increase the slow rotation speed of the main shaft, transferred as higher rotation to the generator.

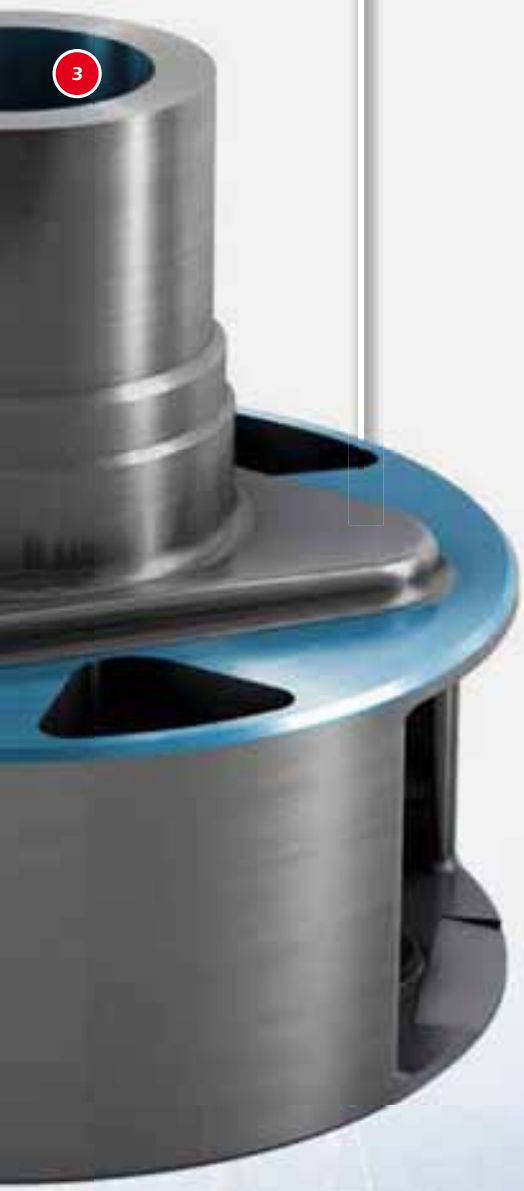

Rough Boring

Range: Ø18 - 200 mm (Ø.708 - 7.87")

ITSBORE

BHR rough boring heads used on MB modular boring system.
Insert holders: IHSR...

SUMO TEC 5005

P	M	K	N	S	H
		✓			

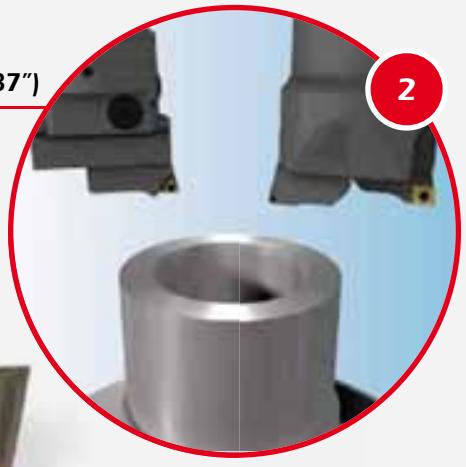

Fine Boring

Range: Ø18 - 500 mm (Ø.708 - 19.68")

ITSBORE

BHF fine boring heads used on MB modular boring system.
Slider: BHFH...
Insert holders: IHRF...

908

P	M	K	N	S	H
✓	✓	✓		✓	✓

Planetary Carrier

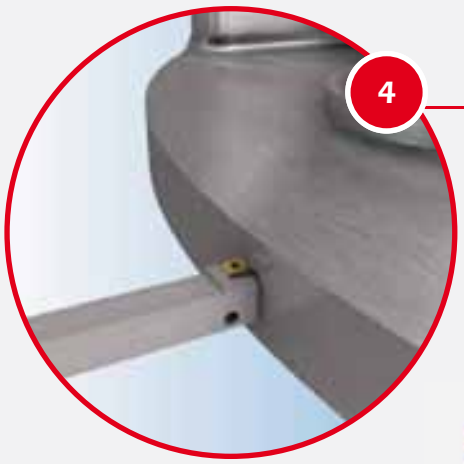

4

Turning

HELITURN TG

Tangentially clamped insert and unique helical shaped cutting edges provide an exceptional solution, enabling the use of very large depths of cut and high feeds.

SUMO TEC 8150	SUMO TEC 8250
P M K N S H	P M K N S H
✓ ✓	✓ ✓

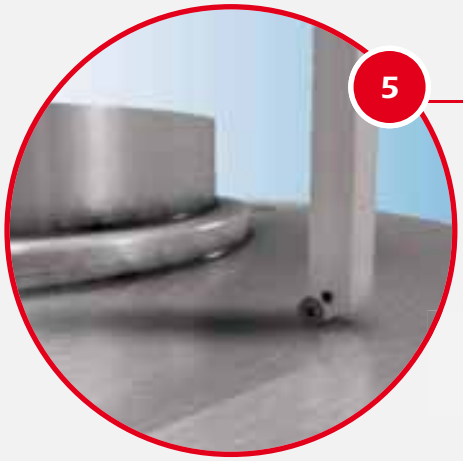

5

Turning

SUMOTURN

HEAVY DUTY LINE

A line of external and internal tools, as well as large-sized inserts for the heavy duty applications.

SUMO TEC 8150	SUMO TEC 8250
P M K N S H	P M K N S H
✓ ✓	✓ ✓

6

Rough Helical Interpolation

Range: Ø40 - 160 mm (Ø1.57 - 6.3")

MILLSHRED

Milling cutters that can carry either round inserts with a serrated cutting edge or regular round inserts. The serrated insert has four indexing orientation options and the round insert has eight.

908

P	M	K	N	S	H
✓	✓	✓		✓	✓

Ø40-Ø160 mm

The rotary gear planetary carrier made of nodular cast iron, is part of the gear assembly. It functions to increase the slow rotation speed of the main shaft, transferred as higher rotation to the generator.

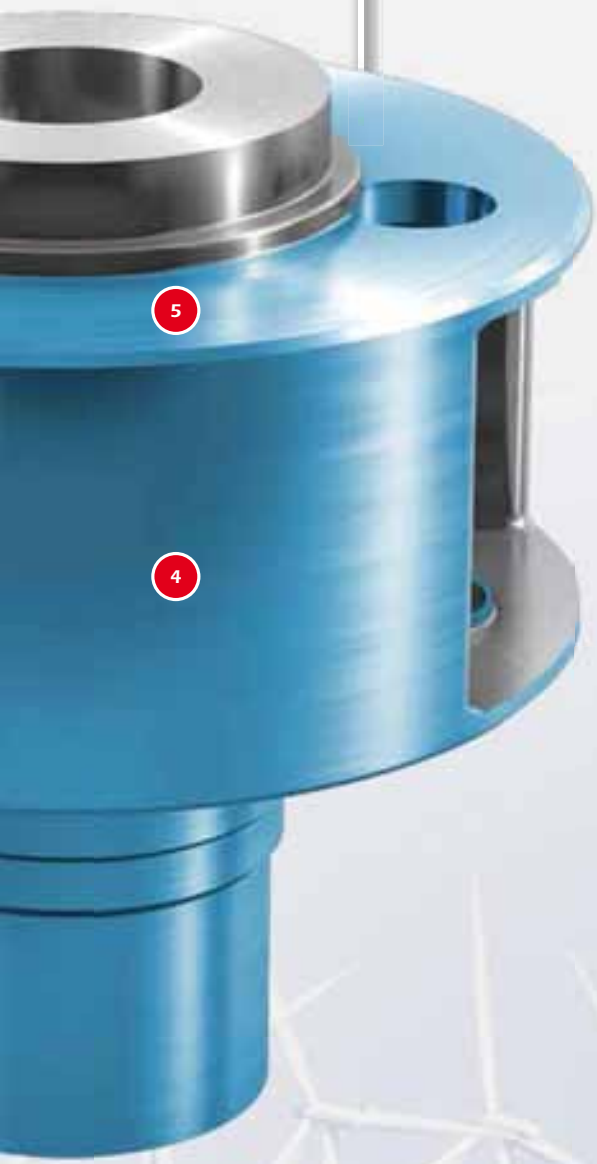

Finish Helical Interpolation

Range: Ø16-315 mm (Ø.63"-12.4")

7

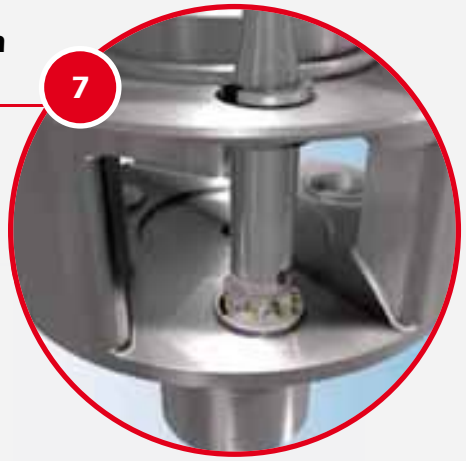

HELIDO
490 LINE

HELIDO is a family of tools for 90° milling. The HELIDO H490 ANKX rectangular inserts have 4 helical right-hand cutting edges.

SUMO TEC 810

P	M	K	N	S	H
✓	✓			✓	

Ø16-Ø315 mm

Fine Boring

Range: Ø18 - 500 mm (Ø.708 - 19.68")

8

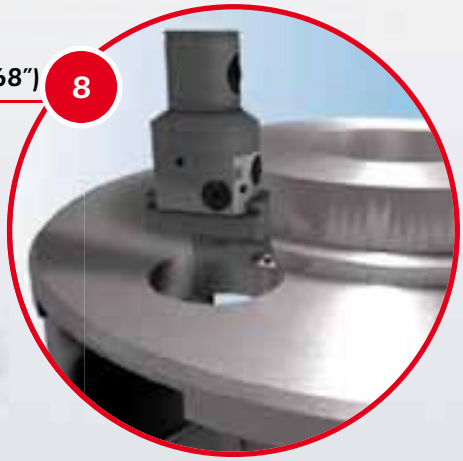

ITSBORE

BHF fine boring heads used on MB modular boring system.
Slider: BHFH...
Insert holders: IHRF...

908

P	M	K	N	S	H
✓	✓	✓		✓	✓

Ø18-Ø500 mm

Support Base

1

Shouldering

Range: Ø16 - 315 mm (Ø.63 - 12.4")

HELIDO
490 LINE

HELIDO is a family of tools for 90° milling. The HELIDO H490 ANKX rectangular inserts have 4 helical right-hand cutting edges.

SUMO TEC 810

P	M	K	N	S	H
✓	✓				✓

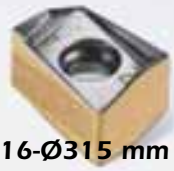

Ø16-Ø315 mm

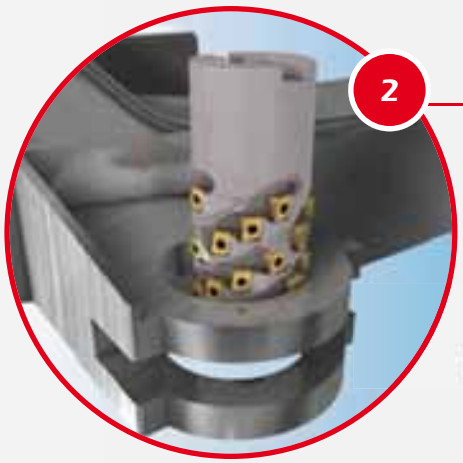

2

Extended Flute Counter Bore Interpolated Milling

Range: Ø16 - 125 mm (Ø.63- 4.92")

HELITANG
T490 LINE

4 cutting corners, tangential geometry for Fast Metal Removal at very high material removal rates.

SUMO TEC 810

P	M	K	N	S	H
✓	✓				✓

Ø16-Ø125 mm

3

Fine Boring

Range: Ø18 - 500 mm (Ø.708 - 19.68")

ITSBORE

The ITSBORE System
Shank: BHF MB80-125x114
Boring holders: BHFH in size 40x133, 40x200, 40x300

908

P	M	K	N	S	H
✓	✓	✓		✓	✓

Ø18-Ø500 mm

Wind Power industry

A very large casting of high quality metallurgical ductile iron, supports the entire turbine drive train and transmits the load of nacelle components to the tower.

Face Milling

Range: Ø63-315 mm (Ø2.48"-12.4")

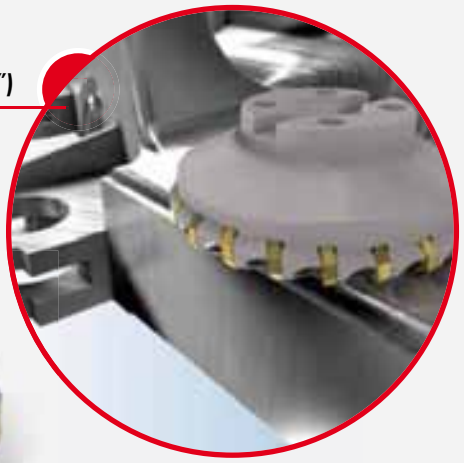

16MILL

16 economical cutting corners for Fast Metal Removal. Fine pitch 45° face mills are designed for high table speeds.

SUMO TEC 808

P	M	K	N	S	H
✓	✓	✓		✓	✓

Ø63-Ø315 mm

Face Milling

Range: Ø40 - 200 mm (Ø1.57- 7.87")

HELIDO

845 LINE

S845 SNMU 1305... - square, double-sided inserts with 8 cutting edges or the ONMU 0505... octagonal, double-sided inserts with 16 cutting edges.

SUMO TEC 808

P	M	K	N	S	H
✓	✓	✓		✓	✓

Ø40-Ø200 mm

Yaw System

1

Gear Gashing Slotting (Roughing)
Gear Gashing Slotting (Finishing)
Range: Ø300 - 420 mm (Ø11.81 - 16.53")

Gear slotting cutters with tangentially mounted inserts for rough and finishing applications of teeth profile modules.

908

P	M	K	N	S	H
✓	✓	✓		✓	✓

Ø300-Ø420 mm

2

Drilling
Range: Ø25 - 65 mm (Ø.984 - 2.56")

DR-DH

Deep drills for milling centers and lathe machines **Ø25-65 mm**

Range: Ø12 - 80 mm (Ø.472 - 3.15")

DR-TWIST
INDEXABLE DRILL LINE

These drills are designed with twisted coolant channels, allowing a strong body with excellent resistance to torsion and very efficient chip evacuation.

SUMO TEC 808

P	M	K	N	S	H
✓	✓	✓		✓	✓

Ø14-Ø60 mm

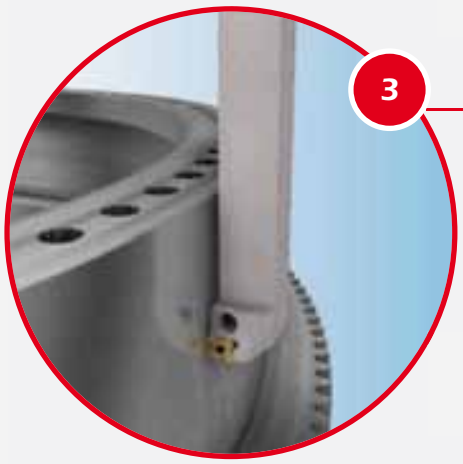

3

External Rough Turning

SUMOTURN
HEAVY DUTY LINE

A line of external and internal tools, as well as large-sized inserts for the heavy duty applications.

SUMO TEC 8150

P	M	K	N	S	H
✓		✓			

SUMO TEC 8250

P	M	K	N	S	H
✓	✓				

Wind Power Industry

The yaw system of wind turbines is the component responsible for the orientation of the wind turbine rotor towards the wind. This is a mechanism that rotates the nacelle to face the changing wind direction, made of alloy or bearing steel.

Bearing Rolling Inner Boring

SUMOTURN
HEAVY DUTY LINE

A line of external and internal tools, as well as large-sized inserts for the heavy duty applications.

SUMO TEC 8150	SUMO TEC 8250
P M K N S H	P M K N S H
✓ ✓	✓ ✓

Ceramic - Hard Turning Finishing Operation

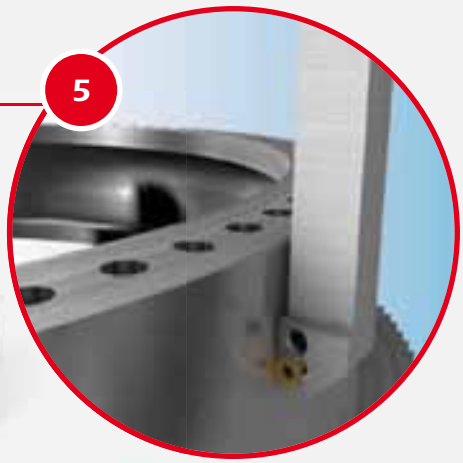

ISOTURN

IN23 - 40-50 HRc
IN22 - over 50 HRc
IN420 - over 50 HRc

IN22	IN23	IN420
P M K N S H	P M K N S H	P M K N S H
✓ ✓	✓ ✓	✓ ✓

CBN - Hard Turning Finishing Operation

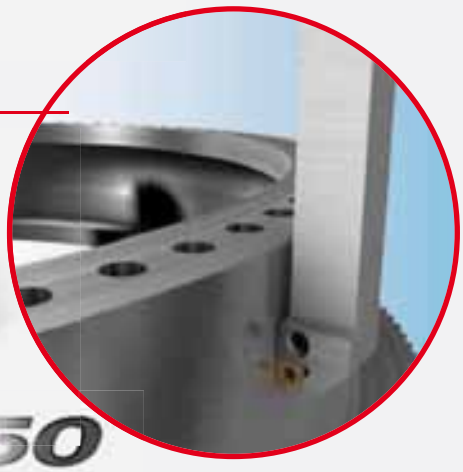

ISOTURN

IB55 - 45-65 HRc
IB50 - 45-65 HRc
(interrupted cutting)

IB55	IB50
P M K N S H	P M K N S H
✓ ✓	✓ ✓

Tower Flange

1

Drilling

Range: Ø8 - 25.9 mm (Ø.315 - 1.02")

SUMOCHAM
CHAMDRILL LINE

SUMOCHAM comprises a revolutionary clamping system that enables improved productivity output rates, while enabling more insert indexes.

908

P	M	K	N	S	H
✓	✓	✓		✓	✓

Ø8-Ø25.9 mm

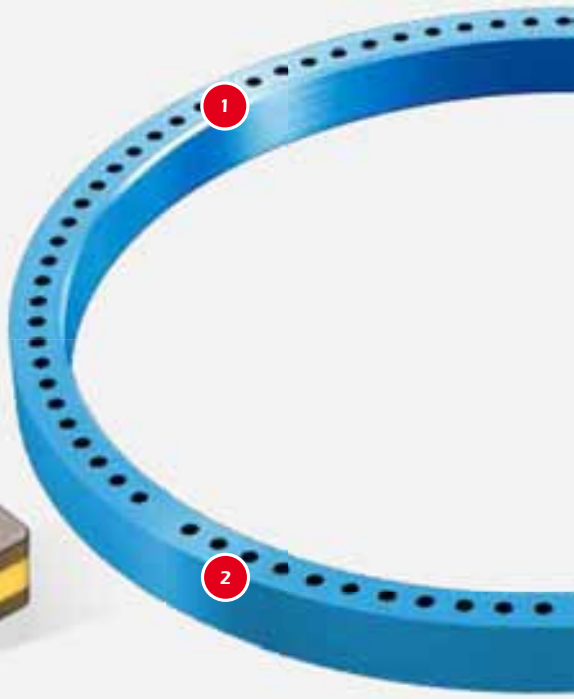

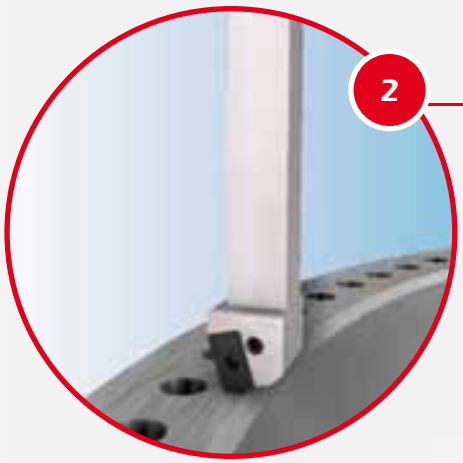

2

External Rough Turning

SUMOTURN
HEAVY DUTY LINE

A line of external and internal tools, as well as large-sized inserts for the heavy duty applications.

SUMO TEC 8150

P	M	K	N	S	H
✓		✓			

SUMO TEC 8250

P	M	K	N	S	H
✓	✓				

3

Ceramics - Hard Turning Finishing Operation

ISOTURN

IN23 - 40-50 HRc
IN22 - over 50 HRc
IN420 - over 50 HRc

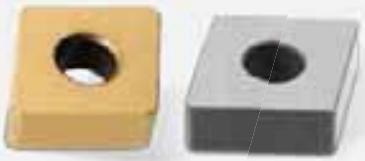

IN22

P	M	K	N	S	H
		✓			✓

IN23

P	M	K	N	S	H
		✓			✓

IN420

P	M	K	N	S	H
		✓			✓

Wind Power industry

The vast majority of commercial wind turbines use tubular steel towers. In some circumstances lattice towers are used for smaller capacity turbines. Tower heights depend on rotor diameter and the wind speed conditions of the site. Tower heights range from 50 meters for a 1 MW turbine to as high as 125 meters and more for very large turbines. The flange comprises a large scale of rolled steel which connects the tower's conical links.

CBN - Hard Turning Finishing Operation

ISOTURN

IB50 - 45-65 HRc
(interrupted cutting)
IB10H - 58-65 HRc
IB10HC - 58-65 HRc
(continuous cutting)

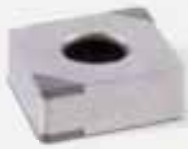

IB10H

P	M	K	N	S	H
					✓

IB50

P	M	K	N	S	H
		✓			✓

IB10HC

P	M	K	N	S	H
					✓

Stay One Step Ahead of Your Competitors by Utilizing Your 3Productivity Toolbox!

- Use the most up-to-date innovative tooling technologies.
- Improve your current technical skills.
- Decrease quality control rejection rate.
- Increase chip volume capacity.
- Reduce tool inventory.
- Cost and efficiency data accessibility.
- ISCAR CTMS tool management program helps you to maintain your value.

3Productivity Plan

Program Introduction

Production Floor Audit

New Technical Process Layout and CPU Reports

New Tooling Costs and ROI Proposal

ISCAR's objective is to create a strategic partnership with leading enterprises who share a mutual commitment to excellence, innovation and **productivity**.

The process involves optimization of production process and manufacturing costs by measuring input (resources)/output (goods); variable during a time sequence. **Productivity** and efficiency output will have greater impact, while the process will have wider exposure and reflect a common goal by all levels of employees throughout the organization.

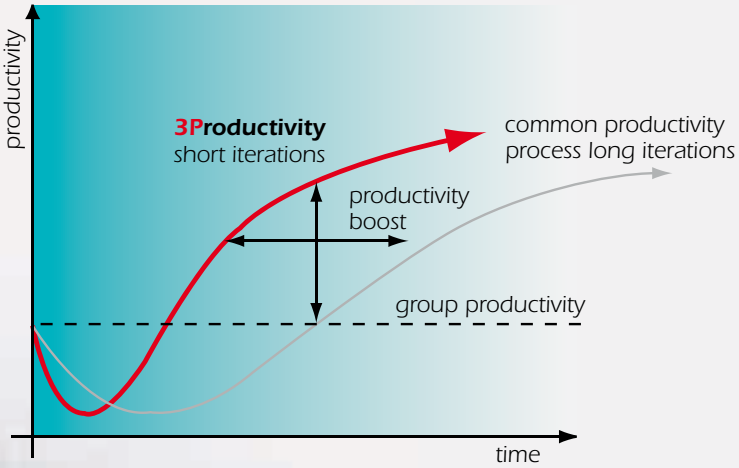

ISCAR's **3Productivity** program will dramatically reduce your labor, machinery and overhead costs by: optimizing production layout and process with advanced and innovative cutting tool technologies; and expert guidance from professional qualified teams.

How to Boost **Productivity**?

- Optimize capacity
- Deliver sooner! (the global market demands the highest levels of service)
- Quicker ROI on your production equipment

With the increasing use of composite materials, the world's chip pile is shrinking. Boost your **productivity**, and you maintain profitability on the ever smaller machined parts.
The **ISCAR 3Productivity** team will help you to maintain profitability and competitiveness of your enterprise!

People are the Most Precious Asset!

Productivity starts on the production floor.
The transition towards higher **productivity** can only be accomplished by promoting the best practices. ISCAR provides ongoing technical training to the members of your staff, with the goal to accept change and learn how to benefit from the new **productivity** approach.

Maximize Competitivness

3Productivity

Performance ■ Profitability

The industrial revolution continues to demand fast-paced machining cycles. Highly productive technologies in the metal cutting industries are on an endless quest to seek innovative solutions. **ISCAR**'s introduction of ***Fast Metal Removal*** has become an industry standard which strives for ultimate ongoing **productivity** solutions. **ISCAR's** newly launched **3Productivity** program assures increased production capabilities, a better return on investment in equipment, and above all will help to keep your business profitable and competitive at all times!

ISCAR LTD.
Headquarters
Tefen 24959, Israel
Tel +972 (0)4 997 0311
Fax +972 (0)4 987 3741
www.iscar.com
headquarter@iscar.co.il

Argentina
ISCAR TOOLS ARGENTINA SA
Monteagudo 222
1437 Buenos Aires
Tel +54 114 912 2200
Fax +54 114 912 4411
admin@iscararg.com.ar

Australia
ISCAR AUSTRALIA Pty LTD.
38-42 Seville Street
East Fairfield NSW 2165
Tel +61 (0)2 9722 4500
Fax +61 (0)2 9722 4511
iscaraus@iscar.com.au
www.iscar.com.au

Austria
ISCAR AUSTRIA GmbH
Im Stadtgut C 2
A-4407 Steyr-Gleink
Tel +43 7252 71200-0
Fax +43 7252 71200-999
office@iscar.at
www.iscar.at

Belarus
ISCAR BELARUS
(Representative Office)
Nachimova str. 12, office 101
220033 Minsk
Tel/Fax: +375 17 298-13-67/58
ovsey_imc_belarus@sml.by
www.iscar.ru

Belgium
n.v. ISCAR BENELUX s.a.
Roekhout 13
B 1702 Dilbeek (Groot-Bijgaarden)
Tel +32 (0) 2 464 2020
Fax +32 (0) 2 522 5121
info@iscar.be
www.iscar.be

Bosnia
Representative Office
Kralja Tvrtka I br. 17
BIH- 72000 Zenica
Tel +387 32 201 100
Fax+387 32 201 101
info@iscar.ba

Brazil
ISCAR DO BRASIL COML. LTDA.
Rodovia Miguel Melhado Campos,
Km 79, Bairro Moinho
CEP: 13280-000 - Vinhedo - SP
Tel +55 19 3826-7100
Fax +55 19 3826-7171
DDG 0800 701 8877
iscar@iscarbrasil.com.br
www.iscar.com.br

Bulgaria
ISCAR BULGARIA
37 A, "N. Petkov" str.
Floor 2; Room 12
6100 Kazanlak
Tel/Fax +359 431 62557
aa_iscar@infotel.bg

Canada
ISCAR TOOLS INC.
2100 Bristol Circle
Oakville, Ontario L6H 5R3
Tel +1 905 829 9000
Fax +1 905 829 9100
admin@iscar.ca
www.iscar.ca

China
ISCAR CHINA
7B21, Hanwei Plaza,
7 Guanghua Road
Chaoyang District
Bejiing 100004
Tel +86 10 6561 0261/2/3
Fax +86 10 6561 0264
iscar@iscar.com.cn
www.iscar.com.cn

Croatia
ISCAR ALATI d.o.o.
J. Jelačiča 134
CRO-10430 Samobor
Tel +385 (0) 1 33 23 301
Fax +385 (0) 1 33 76 145
iscar@zg.t-com.hr
www.iscar.hr

Czech Republic
ISCAR CR s.r.o.
Mánesova 73, 301 00 Plzen
Tel +420 377 420 625
Fax +420 377 420 630
iscar@iscar.cz
www.iscar.cz

Finland
ISCAR FINLAND OY
Ahertajantie 6
02100 Espoo
Tel +358-(0)9-439 1420
Fax +358-(0)9-466 328
info@iscar.fi

France
ISCAR FRANCE SAS
8, Rue Georges Guynemer
78286 GUYANCOURT Cedex
Tel +33 (0)1 30 12 92 92
Fax +33 (0)1 30 43 88 22
info@iscar.fr
www.iscar.fr

Germany
ISCAR GERMANY GmbH
Eisenstockstrasse 14
D 76275 Ettlingen
Tel +49 (0) 72 43 9908-0
Fax +49 (0) 72 43 9908-93
gmbh@iscar.de
www.iscar.de

Hungary
ISCAR HUNGARY kft
Kassai u 151
H 1142 Budapest
Tel +36 1 251 5688
Fax +36 1 251 4757
iscar@iscar.hu
www.iscar.hu

Italy
ISCAR ITALIA srl
Via Mattei 49 / 51
20020 Arese [MI]
Tel +39 02 93 528 1
Fax +39 02 93 528 213
marketing@iscaritalia.it
www.iscaritalia.it

Japan
ISCAR JAPAN LTD.
Head Office
15th Floor, Senri Asahi
Hankyu Building
1-5-3, Shinsenri-Higashimachi
Toyonaka-Shi,
Osaka 560-0082
Tel +81 6 6835 5471
Fax +81 6 6835 5472
iscar@iscar.co.jp
www.iscar.co.jp

Macedonia
Representative Office
Londonska 19/4
MK-1000 Skopje
Tel +389 2 309 02 52
Fax +389 2 309 02 54
info@iscar.com.mk

Mexico
ISCAR DE MÉXICO,
S.A de C.V.
Fray Pedro de Gante 15
Col. Cimatario
Querétaro, Qro.
C.P. 76030
Tel +52 (442) 214 5505
Fax +52 (442) 214 5510
iscarmex@iscar.com.mx
www.iscar.com.mx

The Netherlands
ISCAR NEDERLAND B.V.
Postbus 704, 2800 AS Gouda
Tel +31 (0) 182 535523
Fax +31 (0) 182 572777
info@iscar.nl
www.iscar.nl

New Zealand
ISCAR PACIFIC LTD.
1/501 Mt. Wellington Hwy.
Mt. Wellington Auckland
Tel +64 9 5731280
Fax +64 9 5730781
iscar@iscarpac.co.nz

Poland
ISCAR POLAND Sp. z o.o.
ul. Gospodarcza 14
40-432 Katowice
Tel +48 32 735 7700
Fax +48 32 735 7701
iscar@iscar.pl
www.iscar.pl

Portugal
ISCAR PORTUGAL, SA
Avd.Dr.Domingos
Caetano de Sousa
Fracção B, Nº 541
4520-165 Santa Maria da Feira
Tel +351 256 579950
Fax +351 256 586764
geral@iscarportugal.pt
www.iscarportugal.pt

Romania
ISCAR TOOLS SRL
Str. Maramures nr. 38,
Corp 2, Otopeni,
jud. Ilfov, cod 010832
Tel +40 (0)312 286 614
Fax +40 (0)312 286 615
iscar-romania@iscar.com

Russia
Moscow
ISCAR RUSSIA LLC
Malaya Andronievskaya str., 20/8
109554, Moscow
Tel/fax +7 095 956 47 69
iscar@iscar.ru
www.iscar.ru

Chelyabinsk
ISCAR RF EAST LTD
Malogruzovaya str., 1 - office 605
454007, Chelyabinsk
Tel/fax +7 351 2450432
rfe@iscar.com
www.iscar.ru

Serbia
ISCAR TOOLS d.o.o.
Autoput 22
SRB-11080 Zemun
Tel +381 11 314 90 38
Fax +381 11 314 91 47
info@iscartools.co.yu

Slovakia
ISCAR SR, s.r.o.
K múzeu 3
010 03 Zilina
Tel +421 (0) 41 5074301
Fax +421 (0) 41 5074311
info@iscar.sk
www.iscar.sk

Slovenija
ISCAR SLOVENIJA d.o.o.
IOC, Motnica 14
SI-1236 Trzin
Tel +386 1 580 92 30
Fax +386 1 562 21 84
info@iscar.si
www.iscar.si

South Africa
ISCAR SOUTH AFRICA (PTY) LTD.
98 Lake Road
Longmeadow Business Estate
Extension 7 Gauteng
P.O. Box 2406
Kempton Park 1620
ShareCall 08600-47227
Tel +27 11 997 2700
Fax +27 11 388 9750
iscar@iscarsa.co.za
www.iscar.co.za

South Korea
ISCAR KOREA
304 Youggye-Ri,
Gachang-myeon
Dalsung-gun, Daegu 711-860
Tel +82 53 760 7590
Fax +82 53 767 7203
koss@taegutec.co.kr
www.iscarkorea.co.kr

Spain
ISCAR IBERICA SA
Parc Tecnològic del Vallès
Avda. Universitat Autònoma 19-21
08290 Cerdanyola-Barcelona
Tel +34 93 594 6484
Fax +34 93 582 4458
iscar@iscarib.es
www.iscarib.es

Sweden
ISCAR SVERIGE AB
Kungsangsvagen 17B
Box 845
751 08 Uppsala
Tel +46 (0) 18 66 90 60
Fax +46 (0) 18 122 920
info@iscar.se
www.iscar.se

Switzerland
ISCAR HARTMETALL AG
Wespenstrasse 14
CH 8500 Frauenfeld
Tel +41 (0) 52 728 0850
Fax +41 (0) 52 728 0855
office@iscar.ch
www.iscar.ch

Taiwan
ISCAR TAIWAN LTD.
395, Da Duen South Road,
Taichung 408
Tel +886 (0)4-24731573
Fax +886 (0)4-24731530
iscar.taiwan@msa.hinet.net
www.iscar.org.tw

Thailand
ISCAR THAILAND LTD.
57, 59, 61, 63 Soi Samanchan-
BabosSukhumvit Rd.
Phra Khanong, Khlong Toey

Bangkok 10110
Tel +66 (2) 7136633-8
Fax +66 (2) 7136632
iscar@iscarthailand.com

Turkey
ISCAR KESICI TAKIM
TIC. VE IML. LTD. STI.
Gebze Organize Sanayi Bölgesi
(GOSB)
Ihsan Dede Cad. No: 105
Gebze / Kocaeli
Tel +90 (262) 751 04 84 (Pbx)
Fax +90 (262) 751 04 85
iscar@iscar.com.tr
www.iscar.com.tr

Ukraine
ISCAR UKRAINE LLC
Volgodonska str., 66
02099 Kiev
Tel/fax +38 (044) 503-07-08
iscar_ua@iscar.com
www.iscar.ru

United Kingdom
ISCAR TOOLS LTD.
Woodgate Business Park
Bartley Green
Birmingham B32 3DE
Tel +44 (0) 121 422 8585
Fax +44 (0) 121 423 2789
sales@iscaruk.co.uk
www.iscaruk.co.uk

United States
ISCAR METALS INC.
300 Westway Place
Arlington, TX 76018-1021
Tel +1 817 258 3200
Tech Tel 1-877-BY-ISCAR

Fax +1 817 258 3221
info@iscarmetals.com
www.iscarmetals.com

Vietnam
ISCAR VIETNAM
(Representative Office)
Room D 2.8, Etown Building,
364 Cong Hoa, Tan Binh Dist.,
Ho Chi Minh City
Tel +84 38 123 519/20
Fax +84 38 123 521
iscarvn@hcm.fpt.vn

"As part of Iscar's ongoing effort to improve its products, it reserves the right to make changes to any of the products appearing in this publication, without prior notice."

© ISCAR LTD.
All rights reserved
10/2009

7861303

Wind Power Industry